Property Location 27 PIONEER CR | Map ID 87/ 21/ 26/ / | Bldg Name | State Use 101
Vision ID 5840 | Account # 5922 | Bldg # 1 | Sec # 1 of 1 | Card # 1 of 1 | Print Date 11-04-2020 10:24:04

CURRENT OWNER	TOPO TYPE	UTILITY	STREET	LOCATION
QUIMBY STEPHEN R				
	TOPO WET	EASEMENT	TRAFFIC	CORNER
27 PIONEER CR				
	DRAINAGE		VIEW	COMMUNITY
EAST LONGMEADOW MA 01028				

GIS ID F_393002_2852149

SUPPLEMENTAL DATA

Alt Prcl ID	Received
SP Permit	NIA
Chapter Land	Field 8
OC Dates	Field 9
In+Ex FY	Field 10
Mailed	Assoc Pid#

CURRENT ASSESSMENT

Description	Code	Appraised	Assessed
RESIDNTL.	101	216600	216,600
RES LAND	101	97600	97,600
RESIDNTL.	101	900	900
Total		315,100	315,100

1006
EAST LONGMEADOW

RECORD OF OWNERSHIP

	BK-VOL/PAGE		SALE DATE	Q/U	V/I	SALE PRICE	VC
QUIMBY STEPHEN R	7675	0316	04-11-1991	U	I	1	1A
QUIMBY MARY T	07441	0359	04-30-1990	U	I	1	1A
QUIMBY STEPHEN R	6407	0548	03-06-1987	U	I	1	1A
QUIMBY	05912	0141	10-03-1985	U	I	72,500	

PREVIOUS ASSESSMENTS (HISTORY)

Year	Code	Assessed	Year	Code	Assessed	Year	Code	Assessed
2020	101	170,900	2019	101	166,000	2018	101	153,100
	101	97,600		101	94,800		101	94,800
	101	900		101	3,300		101	3,300
	Total	269400		Total	264100		Total	251200

EXEMPTIONS

Year	Code	Description	Amount
		Total	0.00

OTHER ASSESSMENTS

Code	Description	YEAR	Amount	Comm Int

This signature acknowledges a visit by a Data Collector or Assessor

ASSESSING NEIGHBORHOOD

Nbhd	Nbhd Name	B	Tracing	Batch
0001			101	MA

NOTES

APPRAISED VALUE SUMMARY

Appraised BLDG. Value (Card)	216,600
Appraised Xf (B) Value (Bldg)	0
Appraised Ob (B) Value (Bldg)	900
Appraised Land Value (Bldg)	97,600
Special Land Value	0
Total Appraised Parcel Value	315,100
Valuation Method	C
Adjustment	
Net Total Appraised Parcel Value	315,100

BUILDING PERMIT RECORD

Permit Id	Issue Date	Type	Description	Amount	Insp Date	% Comp	Date Comp	Comments
201903168	11-04-2019	8	RENOVATION	27,000	06-30-2020	100		RENOVATE KITCHE
201203412	11-07-2012	91	INSULATION	2,700				
292	10-01-1992	MN	Manual Note	20,000				ADDITION
224	10-01-1991	MN	Manual Note	15,000				ADDITION
45	03-01-1987	MN	Manual Note	5,000				KIT ADDN

VISIT / CHANGE HISTORY

Date	Type	Is	Id	Cd	Purpose/Result
07-10-2020			400	6	INFO BY PHON
06-30-2020			334	15	PERMIT VISIT
08-22-2019			334	2	MEASURED
06-10-2013			317	15	PERMIT VISIT
06-21-2005			274	3	MEAS+INSPCTD
05-13-2000			247	14	INSPECTED
12-02-1999			247	2	MEASURED

LAND LINE VALUATION SECTION

B	Use Co	Description	Zone	D	Fronta	Depth	Land Units		Unit Price	I. Fact	S.A.	Ac Di	C. Fact	St. Idx	Adj	Notes	Special Pricing				Size A	Adj Unit Pric	Land Value
1	101	ONE FAM	RA				40,000	SF	2.39	1.000	5	LAND	1.00	MA	1.00			0			1.000	2.39	95,600
1	101	ONE FAM	RA				0.290	AC	7,000	1.000	0		1.00	MA	1.00			0			1.000	7,000	2,000
						Total Card Land Units	1.208	AC	Parcel Total Land Area:			1.2083										Total Land Value	97,600

Property Location 27 PIONEER CR | Map ID 87/ 21/ 26/ / | Bldg Name | State Use 101
Vision ID 5840 | Account # 5922 | Bldg # 1 | Sec # 1 of 1 | Card # 1 of 1 | Print Date 11-04-2020 10:24:05

CONSTRUCTION DETAIL

Element	Cd	Description
Style	19	RANCH
Model	01	RESIDENTIAL
Grade	C+	AVG. (+)
Stories	1.00	1 STORY
Foundation	1	CONCRETE
Exterior Wall 1	4	VINYL
Exterior Wall 2		
Roof Structure	1	GABLE
Roof Cover	1	ASPHALT SH
Interior Wall 1	1	DRYWALL
Interior Wall 2		
Interior Floor 1	3	HARDWOOD
Interior Floor 2	4	CARPET
Heat Fuel	2	GAS
Heat Type	3	FORCED H/W
AC Type	01	NONE
Bedrooms	3	
Full Baths	2	
Half Baths	0	
Extra Fixtures	0	
Total Rooms	7	
Bath Style	A	AVERAGE
Half Bath Style		
Kitchens	1	
Kitchen Style	G	GOOD
Extra Kitchens	0	
Extra Kitchen St		
FBM Sqft		
FBM Quality		
Fireplaces	0	
WS Flues	2	
Central Vac	1	YES
Frame	1	WOOD

CONSTRUCTION DETAIL (CONTINUED)

Element	Cd	Description
Basement Floor	12	CONCRETE
Bsmt Garage		
#Heat Sys	1.00	
Units	1	

MIXED USE

Code	Description	Percentage
101	ONE FAM	100
		0
		0

COST / MARKET VALUATION

Adj Base Rate	89.29
RCN	281,279
Net Other Adj	
Year Built	1964
Effective Year Built	1995
Depreciation Code	GV
Remodel Rating	04
Year Remodeled	
Depreciation %	23
Functional Obsol	
External Obsol	
Cost Trend Factor	1
Condition	
% Complete	
Overall % Condition	77
RCNLD	216,600
Dep % Ovr	
Dep Ovr Comment	
Misc Imp Ovr	
Misc Imp Ovr Comment	
Cost to Cure Ovr	
Cost to Cure Ovr Comment	

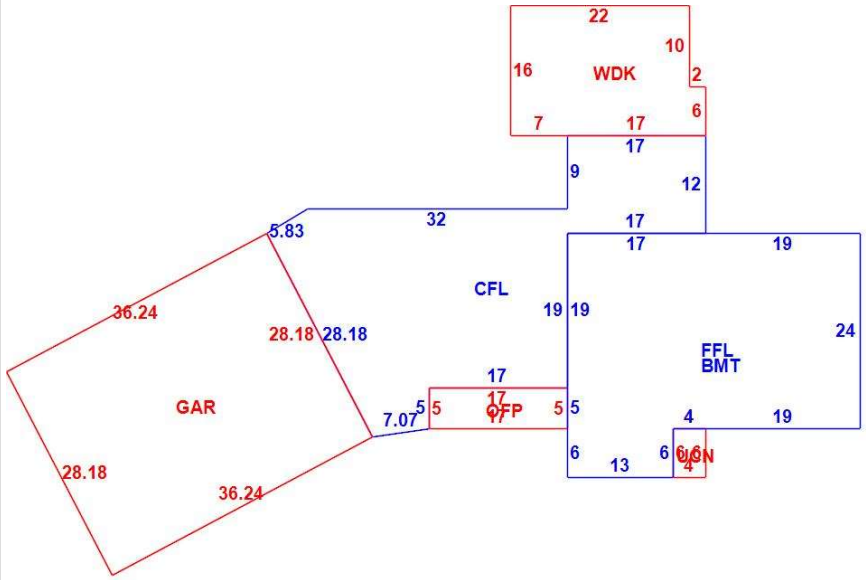

OB - OUTBUILDING & YARD ITEMS(L) / XF - BUILDING EXTRA FEATURES(B)

Code	Description	Su	Sub Type	Lan	Units	Unit Price	Yr Blt	%	Dep.	Cond	Gra	Qual	Apprais Va
02	SHED/FR			L	140	7.48	1999	70	0.00	GD	G	1.25	900

BUILDING SUB-AREA SUMMARY SECTION

Subarea	Description	Living	Gross	Eff Area	Unit Cost	Undeprec Value
BMT	BASEMENT	0	942		21.65	20,394
CFL	CATHEDRAL CE	965	965		111.74	107,825
FFL	1ST FLOOR	942	942		108.48	102,185
GAR	GARAGE	0	1,021		43.35	44,258
OFP	OPEN PORCH	0	85		11.49	976
UCN	UNFIN CAN	0	24		4.52	108
WDK	WOOD DECK	0	364		15.20	5,532
	Ttl Gross Liv / Lease Area	1,907	4,343	2,593		281,279