Property Location 176 MILLBROOK DR | Map ID 88/ 23/ 34/ / | Bldg Name | State Use 101
Vision ID 5896 | Account # 5978 | Bldg # 1 | Sec # 1 of 1 | Card # 1 of 1 | Print Date 11-04-2020 10:33:14

CURRENT OWNER	TOPO TYPE	UTILITY	STREET	LOCATION
MOULA TALABUL				
SULTANA SHAMIMA	TOPO WET	EASEMENT	TRAFFIC	CORNER
176 MILLBROOK DR	DRAINAGE		VIEW	COMMUNITY
EAST LONGMEADOW MA 01028				

GIS ID F_393473_2850667

SUPPLEMENTAL DATA

Alt Prcl ID	Received
SP Permit	NIA
Chapter Land	Field 8
OC Dates	Field 9
In+Ex FY	Field 10
Mailed	Assoc Pid#

CURRENT ASSESSMENT

Description	Code	Appraised	Assessed
RESIDNTL.	101	364100	364,100
RES LAND	101	117900	117,900
Total		482,000	482,000

1006

EAST LONGMEADOW

RECORD OF OWNERSHIP

	BK-VOL/PAGE		SALE DATE	Q/U	V/I	SALE PRICE	VC
MOULA TALABUL	38091	LC	10-17-2018	Q	I	530,000	00
DIRICO DANIEL P	290	0	06-30-1999	U	I	350,000	
ZAYAC,PAUL E &	0128	0030	10-13-1998	U	V	75,000	
DUTIL A INC,	0000	0000		U		0	

PREVIOUS ASSESSMENTS (HISTORY)

Year	Code	Assessed	Year	Code	Assessed	Year	Code	Assessed
2020	101	349,700	2019	101	340,500	2018	101	315,400
	101	117,900		101	114,100		101	114,100
	Total	467600		Total	454600		Total	429500

EXEMPTIONS

Year	Code	Description	Amount
		Total	0.00

OTHER ASSESSMENTS

Code	Description	YEAR	Amount	Comm Int

This signature acknowledges a visit by a Data Collector or Assessor

ASSESSING NEIGHBORHOOD

Nbhd	Nbhd Name	B	Tracing	Batch
0001			101	NV

NOTES

SUB DIV #545

APPRAISED VALUE SUMMARY

Appraised BLDG. Value (Card)	364,100
Appraised Xf (B) Value (Bldg)	0
Appraised Ob (B) Value (Bldg)	0
Appraised Land Value (Bldg)	117,900
Special Land Value	0
Total Appraised Parcel Value	482,000
Valuation Method	C
Adjustment	
Net Total Appraised Parcel Value	482,000

BUILDING PERMIT RECORD

Permit Id	Issue Date	Type	Description	Amount	Insp Date	% Comp	Date Comp	Comments
250	10-30-1998	2	DWELLING	195,000				

VISIT / CHANGE HISTORY

Date	Type	Is	Id	Cd	Purpose/Result
05-04-2018			333	3	MEAS+INSPCTD
07-16-2005			274	2	MEASURED
11-15-1999			247	3	MEAS+INSPCTD
03-23-1999			200	15	PERMIT VISIT

LAND LINE VALUATION SECTION

B	Use Co	Description	Zone	D	Fronta	Depth	Land Units		Unit Price	I. Fact	S.A.	Ac Di	C. Fact	St. Idx	Adj	Notes	Special Pricing				Size A	Adj Unit Pric	Land Value
1	101	ONE FAM	RA				33,966	SF	2.75	1.400	9	LAND	0.90	NV	1.00	ESM1		0			1.000	3.47	117,900
						Total Card Land Units	0.780	AC	Parcel Total Land Area:			0.7798										Total Land Value	117,900

Property Location 176 MILLBROOK DR | Map ID 88/ 23/ 34/ / | Bldg Name | State Use 101
Vision ID 5896 | Account # 5978 | Bldg # 1 | Sec # 1 of 1 | Card # 1 of 1 | Print Date 11-04-2020 10:33:14

CONSTRUCTION DETAIL

Element	Cd	Description
Style	06	COLONIAL
Model	01	RESIDENTIAL
Grade	B	GOOD
Stories	2.00	2 STORY
Foundation	1	CONCRETE
Exterior Wall 1	4	VINYL
Exterior Wall 2	8	BRICK VENR
Roof Structure	2	HIP
Roof Cover	1	ASPHALT SH
Interior Wall 1	1	DRYWALL
Interior Wall 2		
Interior Floor 1	4	CARPET
Interior Floor 2	3	HARDWOOD
Heat Fuel	2	GAS
Heat Type	1	FORCED H/A
AC Type	03	FULL
Bedrooms	4	
Full Baths	4	
Half Baths	1	
Extra Fixtures	2	
Total Rooms	9	
Bath Style	G	GOOD
Half Bath Style	G	GOOD
Kitchens	1	
Kitchen Style	G	GOOD
Extra Kitchens	0	
Extra Kitchen St		
FBM Sqft		
FBM Quality		
Fireplaces	1	
WS Flues		
Central Vac	1	YES
Frame	1	WOOD

CONSTRUCTION DETAIL (CONTINUED)

Element	Cd	Description
Basement Floor	12	CONCRETE
Bsmt Garage		
#Heat Sys	1.00	
Units	1	

MIXED USE

Code	Description	Percentage
101	ONE FAM	100
		0
		0

COST / MARKET VALUATION

Adj Base Rate	76.20
RCN	418,483
Net Other Adj	
Year Built	1998
Effective Year Built	2005
Depreciation Code	GD
Remodel Rating	
Year Remodeled	
Depreciation %	13
Functional Obsol	
External Obsol	
Cost Trend Factor	1
Condition	
% Complete	
Overall % Condition	87
RCNLD	364,100
Dep % Ovr	
Dep Ovr Comment	
Misc Imp Ovr	
Misc Imp Ovr Comment	
Cost to Cure Ovr	
Cost to Cure Ovr Comment	

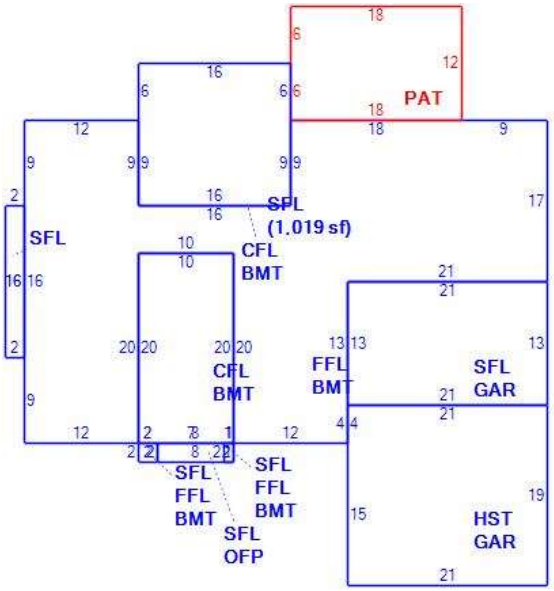

OB - OUTBUILDING & YARD ITEMS(L) / XF - BUILDING EXTRA FEATURES(B)

Code	Description	Su	Sub Type	Lan	Units	Unit Price	Yr Blt	%	Dep.	Cond	Gra	Qual	Apprais Va

BUILDING SUB-AREA SUMMARY SECTION

Subarea	Description	Living	Gross	Eff Area	Unit Cost	Undeprec Value
BMT	BASEMENT	0	1,615		22.15	35,769
CFL	CATHEDRAL CE	440	440		114.01	50,165
FFL	1ST FLOOR	1,175	1,175		110.74	130,118
GAR	GARAGE	0	672		44.33	29,789
HST	HALF STORY	200	399		55.51	22,148
OFP	OPEN PORCH	0	16		13.84	221
PAT	PATIO	0	216		5.64	1,218
SFL	2ND FLOOR	1,346	1,346		110.74	149,055
	Ttl Gross Liv / Lease Area	3,161	5,879	3,779		418,483