Property Location 817 SOMERS RD | Map ID 94/ 2A/ D/ / | Bldg Name | State Use 101
Vision ID 6082 | Account # 6165 | Bldg # 1 | Sec # 1 of 1 | Card # 1 of 1 | Print Date 11-04-2020 11:03:36

CURRENT OWNER	TOPO TYPE	UTILITY	STREET	LOCATION
ILLIG THELMA H				
	TOPO WET	EASEMENT	TRAFFIC	CORNER
817 SOMERS RD				
	DRAINAGE		VIEW	COMMUNITY
EAST LONGMEADOW MA 01028				

GIS ID F_393893_2840578

SUPPLEMENTAL DATA

Alt Prcl ID	Received
SP Permit	NIA
Chapter Land	Field 8
OC Dates	Field 9
In+Ex FY	Field 10
Mailed	Assoc Pid#

CURRENT ASSESSMENT

Description	Code	Appraised	Assessed
RESIDNTL.	101	118300	118,300
RES LAND	101	112200	112,200
RESIDNTL.	101	600	600
Total		231,100	231,100

1006
EAST LONGMEADOW

RECORD OF OWNERSHIP

	BK-VOL/PAGE		SALE DATE	Q/U	V/I	SALE PRICE	VC
ILLIG THELMA H	08385	0262	04-13-1993	U	V	10,000	1
ILLIG	02135	0468	09-19-1951	U	I	0	

PREVIOUS ASSESSMENTS (HISTORY)

Year	Code	Assessed	Year	Code	Assessed	Year	Code	Assessed
2020	101	112,500	2019	101	109,500	2018	101	105,700
	101	112,200		101	109,400		101	109,400
	101	600		101	600		101	600
	Total	225300		Total	219500		Total	215700

EXEMPTIONS

Year	Code	Description	Amount
		Total	0.00

OTHER ASSESSMENTS

Code	Description	YEAR	Amount	Comm Int

This signature acknowledges a visit by a Data Collector or Assessor

ASSESSING NEIGHBORHOOD

Nbhd	Nbhd Name	B	Tracing	Batch
0001			101	MG

NOTES

SUB DIV #705

APPRAISED VALUE SUMMARY

Appraised BLDG. Value (Card)	118,300
Appraised Xf (B) Value (Bldg)	0
Appraised Ob (B) Value (Bldg)	600
Appraised Land Value (Bldg)	112,200
Special Land Value	0
Total Appraised Parcel Value	231,100
Valuation Method	C
Adjustment	
Net Total Appraised Parcel Value	231,100

BUILDING PERMIT RECORD

Permit Id	Issue Date	Type	Description	Amount	Insp Date	% Comp	Date Comp	Comments
253	10-01-1989	MN	Manual Note	1,500				STOVE
12	02-01-1989	MN	Manual Note	10,000				ADDITION

VISIT / CHANGE HISTORY

Date	Type	Is	Id	Cd	Purpose/Result
04-09-2018			333	3	MEAS+INSPCTD
10-13-2010			311	11	ENTRY DENIED
06-16-2005			274	1	LEFT NOTICE
04-03-2000			250	11	ENTRY DENIED
01-03-2000			250	22	MAILER SENT
11-23-1999			247	2	MEASURED
06-30-1992			200	3	MEAS+INSPCTD

LAND LINE VALUATION SECTION

B	Use Co	Description	Zone	D	Fronta	Depth	Land Units		Unit Price	I. Fact	S.A.	Ac Di	C. Fact	St. Idx	Adj	Notes	Special Pricing				Size A	Adj Unit Pric	Land Value
1	101	ONE FAM	RA				40,000	SF	2.39	1.190	7	LAND	1.00	MG	1.00			0	TRF2	0.9	1.000	2.56	102,400
1	101	ONE FAM	RA				1.400	AC	7,000	1.000	0		1.00	MG	1.00			0			1.000	7,000	9,800
						Total Card Land Units	2.318	AC	Parcel Total Land Area:			2.3183										Total Land Value	112,200

Property Location 817 SOMERS RD | Map ID 94/ 2A/ D/ / | Bldg Name | State Use 101
Vision ID 6082 | Account # 6165 | Bldg # 1 | Sec # 1 of 1 | Card # 1 of 1 | Print Date 11-04-2020 11:03:37

CONSTRUCTION DETAIL

Element	Cd	Description
Style	19	RANCH
Model	01	RESIDENTIAL
Grade	C	AVERAGE
Stories	1.00	1 STORY
Foundation	2	CONC BLOCK
Exterior Wall 1	1	WOOD SHING
Exterior Wall 2		
Roof Structure	1	GABLE
Roof Cover	1	ASPHALT SH
Interior Wall 1	1	DRYWALL
Interior Wall 2		
Interior Floor 1	3	HARDWOOD
Interior Floor 2	4	CARPET
Heat Fuel	2	GAS
Heat Type	3	FORCED H/W
AC Type	01	NONE
Bedrooms	3	
Full Baths	1	
Half Baths	0	
Extra Fixtures	1	
Total Rooms	7	
Bath Style	A	AVERAGE
Half Bath Style		
Kitchens	1	
Kitchen Style	A	AVERAGE
Extra Kitchens	0	
Extra Kitchen St		
FBM Sqft	1114	
FBM Quality	1	
Fireplaces	2	
WS Flues		
Central Vac	1	YES
Frame	1	WOOD

CONSTRUCTION DETAIL (CONTINUED)

Element	Cd	Description
Basement Floor		
Bsmt Garage	1	
#Heat Sys	1.00	
Units	1	

MIXED USE

Code	Description	Percentage
101	ONE FAM	100
		0
		0

COST / MARKET VALUATION

Adj Base Rate	102.71
RCN	207,588
Net Other Adj	
Year Built	1957
Effective Year Built	1975
Depreciation Code	AV
Remodel Rating	
Year Remodeled	
Depreciation %	43
Functional Obsol	
External Obsol	
Cost Trend Factor	1
Condition	
% Complete	
Overall % Condition	57
RCNLD	118,300
Dep % Ovr	
Dep Ovr Comment	
Misc Imp Ovr	
Misc Imp Ovr Comment	
Cost to Cure Ovr	
Cost to Cure Ovr Comment	

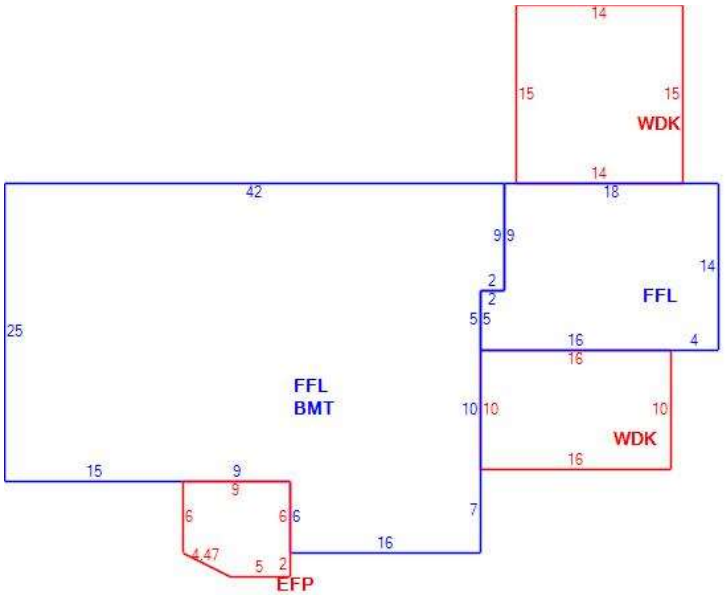

OB - OUTBUILDING & YARD ITEMS(L) / XF - BUILDING EXTRA FEATURES(B)

Code	Description	Su	Sub Type	Lan	Units	Unit Price	Yr Blt	%	Dep.	Cond	Gra	Qual	Apprais Va
02	SHED/FR			L	120	7.48	1998	70	0.00	GD	A	1.00	600

BUILDING SUB-AREA SUMMARY SECTION

Subarea	Description	Living	Gross	Eff Area	Unit Cost	Undeprec Value
BMT	BASEMENT	0	1,114		24.87	27,703
EFP	ENCL PORCH	0	68		36.54	2,485
FFL	1ST FLOOR	1,376	1,376		124.23	170,940
WDK	WOOD DECK	0	370		17.46	6,460
	Ttl Gross Liv / Lease Area	1,376	2,928	1,671		207,588