Property Location 151 NOTTINGHAM DR | Map ID 75/ 62/ 18/ / | Bldg Name | State Use 101
Vision ID 6438 | Account # 6540 | Bldg # 1 | Sec # 1 of 1 | Card # 1 of 1 | Print Date 11-04-2020 11:56:40

CURRENT OWNER	TOPO TYPE	UTILITY	STREET	LOCATION
RAVELLI MASSIMO E				
RAVELLI SANDRA	TOPO WET	EASEMENT	TRAFFIC	CORNER
151 NOTTINGHAM DR	DRAINAGE		VIEW	COMMUNITY
EAST LONGMEADOW MA 01028				

GIS ID F_391733_2850602

SUPPLEMENTAL DATA

Alt Prcl ID	Received
SP Permit	NIA
Chapter Land	Field 8
OC Dates	Field 9
In+Ex FY	Field 10
Mailed	Assoc Pid#

CURRENT ASSESSMENT

Description	Code	Appraised	Assessed
RESIDNTL.	101	372300	372,300
RES LAND	101	109700	109,700
RESIDNTL.	101	300	300
Total		482,300	482,300

1006

EAST LONGMEADOW

RECORD OF OWNERSHIP

	BK-VOL/PAGE		SALE DATE	Q/U	V/I	SALE PRICE	VC
RAVELLI MASSIMO E	12753	0574	11-20-2002	U	V	89,900	1P
APPLE LAND,DEVELOPMENT INC	11946	0104	10-31-2001	U	V	1	1F
ROLLINS,ROBERT H	11632	0459	05-10-2001	U	V	453,000	1
ROLLINS,ROBERT H	0000	0000		U		0	

PREVIOUS ASSESSMENTS (HISTORY)

Year	Code	Assessed	Year	Code	Assessed	Year	Code	Assessed
2020	101	357,100	2019	101	347,400	2018	101	328,100
	101	109,700		101	106,900		101	106,900
	101	300						
	Total	467100		Total	454300		Total	435000

EXEMPTIONS

Year	Code	Description	Amount
		Total	0.00

OTHER ASSESSMENTS

Code	Description	YEAR	Amount	Comm Int

This signature acknowledges a visit by a Data Collector or Assessor

ASSESSING NEIGHBORHOOD

Nbhd	Nbhd Name	B	Tracing	Batch
0001			101	NV

NOTES

SUB DIV #875

APPRAISED VALUE SUMMARY

Appraised BLDG. Value (Card)	372,300
Appraised Xf (B) Value (Bldg)	0
Appraised Ob (B) Value (Bldg)	300
Appraised Land Value (Bldg)	109,700
Special Land Value	0
Total Appraised Parcel Value	482,300
Valuation Method	C
Adjustment	
Net Total Appraised Parcel Value	482,300

BUILDING PERMIT RECORD

Permit Id	Issue Date	Type	Description	Amount	Insp Date	% Comp	Date Comp	Comments
201900705	03-08-2019	91	INSULATION	5,000		0		
329	09-27-2006	7	REMODEL	2,500				FINISH BMT NOT S
32	03-16-2004	7	REMODEL	2,000				OC 10/12/2004 - NV
269	10-10-2003	17	DECK	5,100				OC 10/12/2004
15	02-12-2003	2	DWELLING	249,000				OC 9/29/2003

VISIT / CHANGE HISTORY

Date	Type	Is	Id	Cd	Purpose/Result
08-07-2019			334	2	MEASURED
01-14-2011			317	15	PERMIT VISIT
02-09-2010			316	1	LEFT NOTICE
01-30-2009			317	15	PERMIT VISIT
03-21-2008			317	15	PERMIT VISIT
03-08-2007			311	15	PERMIT VISIT
02-08-2007			311	14	INSPECTED

LAND LINE VALUATION SECTION

B	Use Co	Description	Zone	D	Fronta	Depth	Land Units		Unit Price	I. Fact	S.A.	Ac Di	C. Fact	St. Idx	Adj	Notes	Special Pricing				Size A	Adj Unit Pric	Land Value
1	101	ONE FAM	RA				40,000	SF	2.39	1.400	9	LAND	0.75	NV	1.00	WET3		0			1.000	2.51	100,400
1	101	ONE FAM	RA				1.330	AC	7,000	1.000	0		1.00	NV	1.00			0			1.000	7,000	9,300
						Total Card Land Units	2.248	AC	Parcel Total Land Area:			2.2483										Total Land Value	109,700

Property Location 151 NOTTINGHAM DR | Map ID 75/ 62/ 18/ / | Bldg Name | State Use 101
Vision ID 6438 | Account # 6540 | Bldg # 1 | Sec # 1 of 1 | Card # 1 of 1 | Print Date 11-04-2020 11:56:41

CONSTRUCTION DETAIL

Element	Cd	Description
Style	06	COLONIAL
Model	01	RESIDENTIAL
Grade	B+	GOOD (+)
Stories	2.00	2 STORY
Foundation	1	CONCRETE
Exterior Wall 1	4	VINYL
Exterior Wall 2		
Roof Structure	2	HIP
Roof Cover	1	ASPHALT SH
Interior Wall 1	1	DRYWALL
Interior Wall 2		
Interior Floor 1	3	HARDWOOD
Interior Floor 2	4	CARPET
Heat Fuel	2	GAS
Heat Type	1	FORCED H/A
AC Type	03	FULL
Bedrooms	4	
Full Baths	2	
Half Baths	1	
Extra Fixtures	1	
Total Rooms	9	
Bath Style	A	AVERAGE
Half Bath Style	A	AVERAGE
Kitchens	1	
Kitchen Style	A	AVERAGE
Extra Kitchens	0	
Extra Kitchen St		
FBM Sqft	701	
FBM Quality	4	
Fireplaces	1	
WS Flues		
Central Vac	0	NO
Frame	1	WOOD

CONSTRUCTION DETAIL (CONTINUED)

Element	Cd	Description
Basement Floor	12	CONCRETE
Bsmt Garage	2	
#Heat Sys	1.00	
Units	1	

MIXED USE

Code	Description	Percentage
101	ONE FAM	100
		0
		0

COST / MARKET VALUATION

Adj Base Rate	82.74
RCN	413,622
Net Other Adj	
Year Built	2003
Effective Year Built	2008
Depreciation Code	GD
Remodel Rating	
Year Remodeled	
Depreciation %	10
Functional Obsol	
External Obsol	
Cost Trend Factor	1
Condition	
% Complete	
Overall % Condition	90
RCNLD	372,300
Dep % Ovr	
Dep Ovr Comment	
Misc Imp Ovr	
Misc Imp Ovr Comment	
Cost to Cure Ovr	
Cost to Cure Ovr Comment	

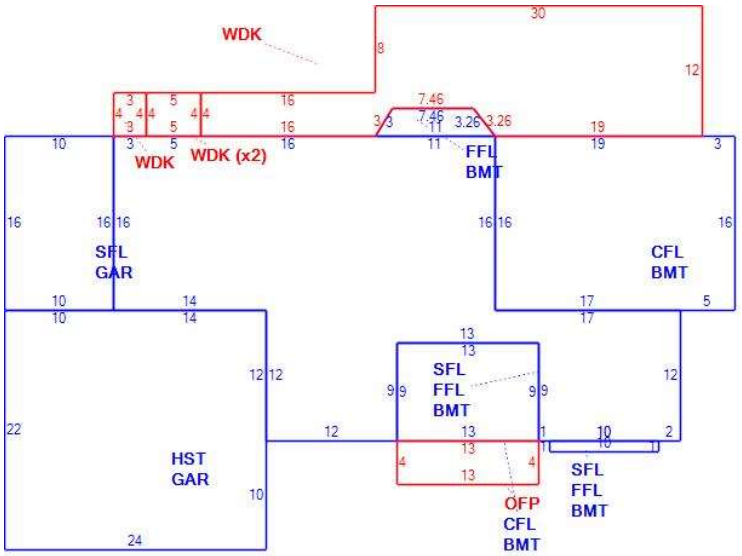

OB - OUTBUILDING & YARD ITEMS(L) / XF - BUILDING EXTRA FEATURES(B)

Code	Description	Su	Sub Type	Lan	Units	Unit Price	Yr Blt	%	Dep.	Cond	Gra	Qual	Apprais Va
19	PATIO			L	100	5.75	2015	60	0.00	AV	A	1.00	300

BUILDING SUB-AREA SUMMARY SECTION

Subarea	Description	Living	Gross	Eff Area	Unit Cost	Undeprec Value
BMT	BASEMENT	0	1,402		24.50	34,346
CFL	CATHEDRAL CE	469	469		126.33	59,247
FFL	1ST FLOOR	933	933		122.66	114,445
GAR	GARAGE	0	688		49.03	33,733
HST	HALF STORY	264	528		61.33	32,383
OFP	OPEN PORCH	0	52		11.79	613
SFL	2ND FLOOR	1,069	1,069		122.66	131,127
WDK	WOOD DECK	0	452		17.10	7,728
	Ttl Gross Liv / Lease Area	2,735	5,593	3,372		413,622