Property Location 323 PINEHURST DR | Map ID 80/ 1/ 323/ / | Bldg Name | State Use 102
Vision ID 6505 | Account # 6608 | Bldg # 1 | Sec # 1 of 1 | Card # 1 of 1 | Print Date 11-04-2020 12:06:39

| CURRENT OWNER | TOPO | UTILITIES | STRT / ROAD | LOCATION |
|---|---|---|---|---|
| IGOE MARY ANN TR | | | | |
| 323 PINEHURST DR | | | | |
| EAST LONGMEADOW MA 01028 | | | | |

**SUPPLEMENTAL DATA**

| | |
|---|---|
| Alt Prcl ID | Received |
| SP Permit | NIA |
| Chapter La | Field 8 |
| OC Dates | Field 9 |
| In+Ex FY | Field 10 |
| Mailed | |
| GIS ID F_392090_2841032 | Assoc Pid# |

**CURRENT ASSESSMENT**

| Description | Code | Assessed | Assessed |
|---|---|---|---|
| RESIDNTL. | 102 | 335,600 | 335,600 |
| | Total | 335,600 | 335,600 |

1006
EAST LONGMEADOW, MA

**VISION**

**RECORD OF OWNERSHIP**

| | BK-VOL/PAGE | | SALE DATE | Q/U | V/I | SALE PRICE | VC |
|---|---|---|---|---|---|---|---|
| IGOE MARY ANN TR | 22621 | 324 | 04-12-2019 | U | I | 100 | 1A |
| IGOE MARY ANN | 22588 | 143 | 03-15-2019 | Q | I | 334,000 | 00 |
| DESHAIS BETTY ANN | 22516 | 0276 | 01-09-2019 | U | I | 100 | 1A |
| DESHAIS BETTY ANN LE | 20560 | 0409 | 01-08-2015 | U | I | 100 | 1A |
| DESHAIS BETTY ANN | 12361 | 0015 | 05-31-2002 | U | I | 263,900 | 1 |

**PREVIOUS ASSESSMENTS (HISTORY)**

| Year | Code | Assessed | Year | Code | Assessed V | Year | Code | Assessed |
|---|---|---|---|---|---|---|---|---|
| 2020 | 102 | 324,900 | 2019 | 102 | 332,100 | 2018 | 102 | 332,100 |
| | Total | 324900 | | Total | 332100 | | Total | 332100 |

**EXEMPTIONS**

| Year | Code | Description | Amount |
|---|---|---|---|
| | | Total | 0.00 |

**OTHER ASSESSMENTS**

| Code | Description | Number | Amount | Comm Int |
|---|---|---|---|---|
| | | | | |

This signature acknowledges a visit by a Data Collector or Assessor

**APPRAISED VALUE SUMMARY**

| | |
|---|---|
| Appraised Bldg. Value (Card) | 335,600 |
| Appraised Xf (B) Value (Bldg) | 0 |
| Appraised Ob (B) Value (Bldg) | 0 |
| Appraised Land Value (Bldg) | 0 |
| Special Land Value | 0 |
| Total Appraised Parcel Value | 335,600 |
| Valuation Method | C |
| Total Appraised Parcel Value | 335,600 |

**ASSESSING NEIGHBORHOOD**

| Nbhd | Nbhd Name | B | Tracing | Batch |
|---|---|---|---|---|
| 0001 | | | 102 | EL |

**NOTES**

ELMCREST COUNTRY CLUB SUB DIV #814

BUILDING 38

**BUILDING PERMIT RECORD**

| Permit Id | Issue Date | Type | Description | Amount | Insp Date | % Comp | Date Comp | Comments |
|---|---|---|---|---|---|---|---|---|
| 320 | 12-11-2001 | 49 | CONDO R | 133,333 | | 0 | | OC 5/23/2002 |

**VISIT / CHANGE HISTORY**

| Date | Id | Type | Is | Cd | Purpose/Result |
|---|---|---|---|---|---|
| 06-07-2005 | 311 | | | 14 | INSPECTED |

**LAND LINE VALUATION SECTION**

| B | Use Code | Description | Zone | Land Type | Land Units | | Unit Price | Size Adj | Site Index | Cond. | Nbhd. | Nbhd. Adj | Notes | Location Adjustment | | Adj Unit P | Land Value |
|---|---|---|---|---|---|---|---|---|---|---|---|---|---|---|---|---|---|
| 1 | 102 | CONDO | PUR | SITE | 0 | SF | 0 | 1.00000 | | 1.00 | EL | 1.000 | | | 0.0000 | 0 | 0 |
| | | | | Total Card Land Units | 0 | SF | Parcel Total Land Area | | | 0.0000 | | | | | Total Land Value | | 0 |

Property Location 323 PINEHURST DR | Map ID 80/ 1/ 323/ / | Bldg Name | State Use 102
Vision ID 6505 | Account # 6608 | Bldg # 1 | Sec # 1 of 1 | Card # 1 of 1 | Print Date 11-04-2020 12:06:39

## CONSTRUCTION DETAIL

| Element | Cd | Description |
|---|---|---|
| Style | 08 | CONDO-TNHS |
| Model | 05 | RES CONDO |
| Grade | C+ | AVG. (+) |
| Stories | 2.00 | 2 STORY |
| Foundation | 1 | CONCRETE |
| Interior Wall 1 | 1 | DRYWALL |
| Interior Wall 2 | | |
| Interior Floor 1 | 3 | HARDWOOD |
| Interior Floor 2 | 4 | CARPET |
| Heat Fuel | 2 | GAS |
| Heat Type | 1 | FORCED H/A |
| AC Type | 03 | FULL |
| Bedrooms | 2 | |
| Full Baths | 2 | |
| Half Baths | 1 | |
| Extra Fixtures | 0 | |
| Total Rooms | 6 | |
| Bath Style | G | GOOD |
| Num Kitchens | 1 | |
| Kitchen Style | G | GOOD |
| FBM Sqft | 380 | |
| FBM Quality | 3 | FLA AVE |
| Fireplaces | 1 | |
| WS Flues | | |
| Central Vac | | 1 |
| Frame | 1 | WOOD |
| Bsmt Floor | 12 | CONCRETE |
| Bsmt Garage | | |
| #Heat Sys | 1 | |
| Occupancy | 1 | |
| Int Vs Ext | S | |

## CONSTRUCTION DETAIL (CONTINUED)

| Element | Cd | Description |
|---|---|---|
| | | |

## CONDO DATA

| | | | | | |
|---|---|---|---|---|---|
| Parcel Id | 6769 | C | 0020 | Owne | |
| | THE ELMS | B | 1 | S | 1 |

| Adjust Type | Code | Description | Factor% |
|---|---|---|---|
| Unit Type C | | | |
| Unit Locatio | E | END UNIT | |

## COST / MARKET VALUATION

| | |
|---|---|
| Adj Base Rate | 118.23 |
| Building Value New | 364,762 |
| Year Built | 2002 |
| Effective Year Built | 2010 |
| Depreciation Code | GD |
| Remodel Rating | |
| Year Remodeled | |
| Depreciation % | 8 |
| Functional Obsol | |
| External Obsol | |
| Trend Factor | 1 |
| Condition | |
| Condition % | |
| Percent Good | 92 |
| Cns Sect Rcnld | 335,600 |
| Dep % Ovr | |
| Dep Ovr Comment | |
| Misc Imp Ovr | |
| Misc Imp Ovr Comment | |
| Cost to Cure Ovr | |
| Cost to Cure Ovr Comment | |

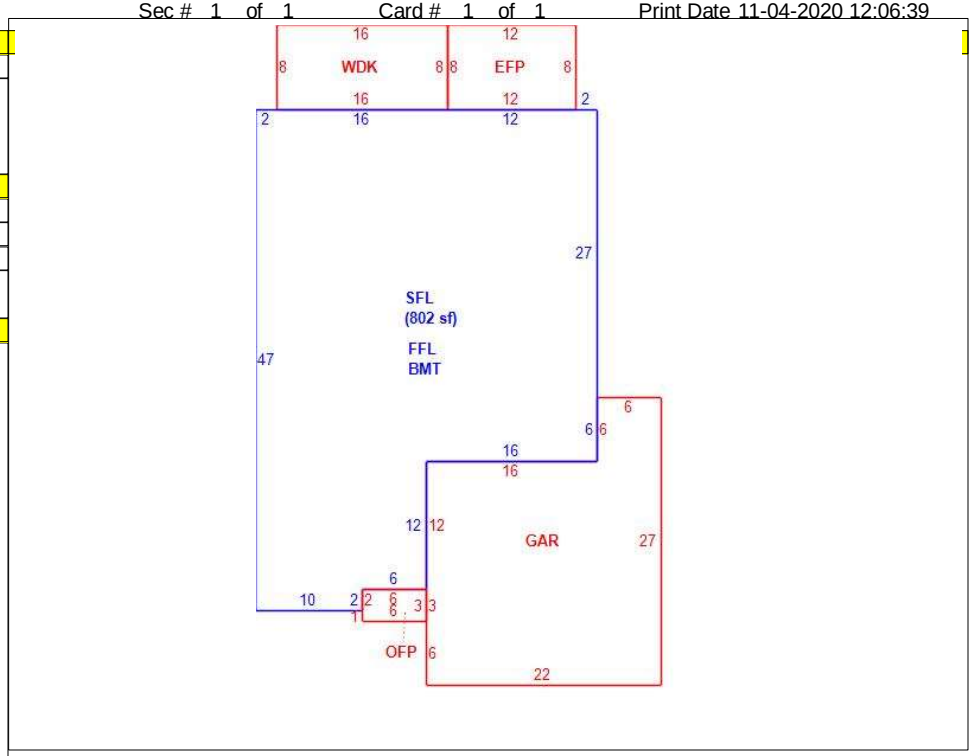


## OB - OUTBUILDING & YARD ITEMS(L) / XF - BUILDING EXTRA FEATURES(B)

| Code | Description | L/B | Units | Unit Price | Yr Blt | Cond. Cd | % Gd | Grade | Grade Adj. | Appr. Value |
|---|---|---|---|---|---|---|---|---|---|---|
| | | | | | | | | | | |

## BUILDING SUB-AREA SUMMARY SECTION

| Code | Description | Living Area | Floor Area | Eff Area | Unit Cost | Undeprec Value |
|---|---|---|---|---|---|---|
| BMT | BASEMENT | 0 | 1,268 | | 28.41 | 36,022 |
| EFP | ENCL PORCH | 0 | 96 | | 42.84 | 4,113 |
| FFL | 1ST FLOOR | 1,268 | 1,268 | | 141.82 | 179,828 |
| GAR | GARAGE | 0 | 498 | | 56.67 | 28,222 |
| OFP | OPEN PORCH | 0 | 18 | | 15.76 | 284 |
| SFL | 2ND FLOOR | 802 | 802 | | 141.82 | 113,740 |
| WDK | WOOD DECK | 0 | 128 | | 19.94 | 2,553 |
| | Ttl Gross Liv / Lease Area | 2,070 | 4,078 | 2,572 | | 364,762 |