Property Location 38 HARWICH RD | Map ID 24/ 73/ 41/ / | Bldg Name | State Use 101
Vision ID 1452 | Account # 1487 | Bldg # 1 | Sec # 1 of 1 | Card # 1 of 1 | Print Date 11/3/2021 3:38:00 PM

CURRENT OWNER	TOPO TYPE	UTILITY	STREET	LOCATION
BRASWELL LUCILLE				
	TOPO WET	EASEMENT	TRAFFIC	CORNER
P O BOX 41				
	DRAINAGE		VIEW	COMMUNITY
WINDSOR LOCKS CT 06096				

SUPPLEMENTAL DATA

Alt Prcl ID	Received
SP Permit	NIA
Chapter Land	Field 8
OC Dates	Field 9
In+Ex FY	Field 10
Mailed	Assoc Pid#

GIS ID F_380780_2855539

CURRENT ASSESSMENT

Description	Code	Appraised	Assessed
RESIDNTL.	101	113700	113,700
RES LAND	101	94000	94,000
RESIDNTL.	101	900	900
Total		208,600	208,600

1006

EAST LONGMEADOW

RECORD OF OWNERSHIP

	BK-VOL/PAGE		SALE DATE	Q/U	V/I	SALE PRICE	VC
BRASWELL LUCILLE	16029	0051	07-03-2006	U	I	100	1A
BOUCHARD PAULA R,HEIRS & DEVISEES O	08029	0001	04-29-1992	U	I	1	1A
BOUCHARD PAULA R +	04818	0164	08-23-1979	U	I	0	

PREVIOUS ASSESSMENTS (HISTORY)

Year	Code	Assessed	Year	Code	Assessed	Year	Code	Assessed
2021	101	108,800	2020	101	103,000	2019	101	100,100
	101	87,100		101	87,100		101	84,500
	101	900		101	900		101	900
	Total	196,800		Total	191,000		Total	185,500

EXEMPTIONS

Year	Code	Description	Amount
		Total	0.00

OTHER ASSESSMENTS

Code	Description	YEAR	Amount	Comm Int

This signature acknowledges a visit by a Data Collector or Assessor

ASSESSING NEIGHBORHOOD

Nbhd	Nbhd Name	B	Tracing	Batch
0001			101	MA

NOTES

APPRAISED VALUE SUMMARY

Appraised BLDG. Value (Card)	113,700
Appraised Xf (B) Value (Bldg)	0
Appraised Ob (B) Value (Bldg)	900
Appraised Land Value (Bldg)	94,000
Special Land Value	0
Total Appraised Parcel Value	208,600
Valuation Method	C
Adjustment	
Net Total Appraised Parcel Value	208,600

BUILDING PERMIT RECORD

Permit Id	Issue Date	Type	Description	Amount	Insp Date	% Comp	Date Comp	Comments
286	08-22-2006	21	SIDING	8,100				
147	05-05-2006	3	GARAGE	22,000		0		OC 8/9/2006 (EXT
108	04-10-2006	12	REROOF	22,000		0		

VISIT / CHANGE HISTORY

Date	Type	Is	Id	Cd	Purpose/Result
04-18-2018			333	2	MEASURED
01-04-2007			311	15	PERMIT VISIT
11-07-2003			274	2	MEASURED
05-20-1980			500	3	MEAS+INSPCTD

LAND LINE VALUATION SECTION

B	Use Co	Description	Zone	D	Fronta	Depth	Land Units		Unit Price	I. Fact	S.A.	Ac Di	C. Fact	St. Idx	Adj	Notes	Special Pricing				Size A	Adj Unit Pric	Land Value
1	101	ONE FAM	RB				16,007	SF	5.87	1.000	5	LAND	1.00	MA	1.00			0			1.000	5.87	94,000
Total Card Land Units							0.37	AC	Parcel Total Land Area:			0.37									Total Land Value		94,000

Property Location 38 HARWICH RD | Map ID 24/ 73/ 41/ / | Bldg Name | State Use 101
Vision ID 1452 | Account # 1487 | Bldg # 1 | Sec # 1 of 1 | Card # 1 of 1 | Print Date 11/3/2021 3:38:01 PM

CONSTRUCTION DETAIL

Element	Cd	Description
Style	19	RANCH
Model	01	RESIDENTIAL
Grade	C	AVERAGE
Stories	1.00	1 STORY
Foundation	1	CONCRETE
Exterior Wall 1	4	VINYL
Exterior Wall 2		
Roof Structure	1	GABLE
Roof Cover	1	ASPHALT SH
Interior Wall 1	1	DRYWALL
Interior Wall 2		
Interior Floor 1	4	CARPET
Interior Floor 2	3	HARDWOOD
Heat Fuel	2	GAS
Heat Type	1	FORCED H/A
AC Type	01	NONE
Bedrooms	3	
Full Baths	1	
Half Baths	0	
Extra Fixtures	0	
Total Rooms	6	
Bath Style	A	AVERAGE
Half Bath Style		
Kitchens	1	
Kitchen Style	A	AVERAGE
Extra Kitchens	0	
Extra Kitchen St		
FBM Sqft		
FBM Quality		
Fireplaces	1	
WS Flues		
Central Vac	0	NO
Frame	1	WOOD

CONSTRUCTION DETAIL (CONTINUED)

Element	Cd	Description
Basement Floor	12	CONCRETE
Bsmt Garage		
#Heat Sys	1.00	
Units	1	

MIXED USE

Code	Description	Percentage
101	ONE FAM	100
		0
		0

COST / MARKET VALUATION

Adj Base Rate	115.65
RCN	180,447
Net Other Adj	
Year Built	1960
Effective Year Built	1981
Depreciation Code	AG
Remodel Rating	
Year Remodeled	
Depreciation %	37
Functional Obsol	
External Obsol	
Cost Trend Factor	1
Condition	
% Complete	
Overall % Condition	63
RCNLD	113,700
Dep % Ovr	
Dep Ovr Comment	
Misc Imp Ovr	
Misc Imp Ovr Comment	
Cost to Cure Ovr	
Cost to Cure Ovr Comment	

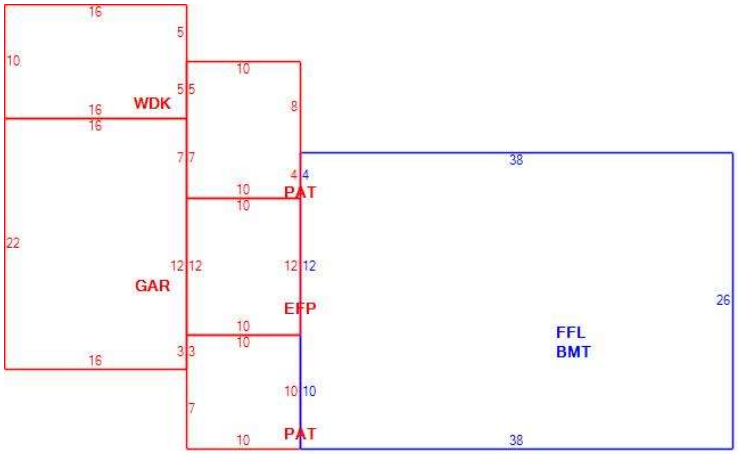

OB - OUTBUILDING & YARD ITEMS(L) / XF - BUILDING EXTRA FEATURES(B)

Code	Description	Su	Sub Type	Lan	Units	Unit Price	Yr Blt	%	Dep.	Cond	Gra	Qual	Apprais Va
02	SHED/FR			L	168	7.48	2002	70	0.00	GD	A	1.00	900

BUILDING SUB-AREA SUMMARY SECTION

Subarea	Description	Living	Gross	Eff Area	Unit Cost	Undeprec Value
BMT	BASEMENT	0	988		25.90	25,593
EFP	ENCL PORCH	0	120		38.78	4,653
FFL	1ST FLOOR	988	988		129.26	127,709
GAR	GARAGE	0	352		51.78	18,226
PAT	PATIO	0	220		6.46	1,422
WDK	WOOD DECK	0	160		17.77	2,844
	Ttl Gross Liv / Lease Area	988	2,828	1,396		180,447