Property Location 90 NORTH MAIN ST | Map ID 26/ 25/ 1/ / | Bldg Name | State Use 101
Vision ID 1807 | Account # 1843 | Bldg # 1 | Sec # 1 of 1 | Card # 1 of 1 | Print Date 11/3/2021 4:30:26 PM

CURRENT OWNER	TOPO TYPE	UTILITY	STREET	LOCATION
MURPHY WILLIAM J JR				
	TOPO WET	EASEMENT	TRAFFIC	CORNER
90 NORTH MAIN ST				
	DRAINAGE		VIEW	COMMUNITY
EAST LONGMEADOW MA 01028				

GIS ID F_380476_2851577

SUPPLEMENTAL DATA

Alt Prcl ID	Received
SP Permit	NIA
Chapter Land	Field 8
OC Dates	Field 9
In+Ex FY	Field 10
Mailed	Assoc Pid#

CURRENT ASSESSMENT

Description	Code	Appraised	Assessed
RESIDNTL.	101	108700	108,700
RES LAND	101	81400	81,400
RESIDNTL.	101	6800	6,800
Total		196,900	196,900

1006
EAST LONGMEADOW

RECORD OF OWNERSHIP

	BK-VOL/PAGE		SALE DATE	Q/U	V/I	SALE PRICE	VC
MURPHY WILLIAM J JR	07026	0040	11-21-1988	U	I	1	1A
MURPHY	06006	0120	02-06-1986	U	I	1	1A
MURPHY	02217	0316	12-26-1952	U	I	0	

PREVIOUS ASSESSMENTS (HISTORY)

Year	Code	Assessed	Year	Code	Assessed	Year	Code	Assessed
2021	101	104,200	2020	101	98,600	2019	101	96,400
	101	75,300		101	75,300		101	73,100
	101	6,800		101	6,800		101	6,800
	Total	186,300		Total	180,700		Total	176,300

EXEMPTIONS

Year	Code	Description	Amount
		Total	0.00

OTHER ASSESSMENTS

Code	Description	YEAR	Amount	Comm Int

This signature acknowledges a visit by a Data Collector or Assessor

ASSESSING NEIGHBORHOOD

Nbhd	Nbhd Name	B	Tracing	Batch
0001			101	MA

NOTES

APPRAISED VALUE SUMMARY

Appraised BLDG. Value (Card)	108,700
Appraised Xf (B) Value (Bldg)	0
Appraised Ob (B) Value (Bldg)	6,800
Appraised Land Value (Bldg)	81,400
Special Land Value	0
Total Appraised Parcel Value	196,900
Valuation Method	C
Adjustment	
Net Total Appraised Parcel Value	196,900

BUILDING PERMIT RECORD

Permit Id	Issue Date	Type	Description	Amount	Insp Date	% Comp	Date Comp	Comments
253	09-01-1993	MN	Manual Note	1,785				REROOF

VISIT / CHANGE HISTORY

Date	Type	Is	Id	Cd	Purpose/Result
03-28-2018			333	3	MEAS+INSPCTD
05-28-2004			303	3	MEAS+INSPCTD
01-27-1994			105	15	PERMIT VISIT
01-30-1992			131	3	MEAS+INSPCTD
01-17-1992			107	22	MAILER SENT
02-04-1981			500	3	MEAS+INSPCTD

LAND LINE VALUATION SECTION

B	Use Co	Description	Zone	D	Fronta	Depth	Land Units		Unit Price	I. Fact	S.A.	Ac Di	C. Fact	St. Idx	Adj	Notes	Special Pricing				Size A	Adj Unit Pric	Land Value
1	101	ONE FAM	RC				6,960	SF	12.99	1.000	5	LAND	1.00	MA	1.00			0	TRF3	0.9	1.000	11.69	81,400
						Total Card Land Units	0.16	AC	Parcel Total Land Area:	0.16												Total Land Value	81,400

Property Location 90 NORTH MAIN ST | Map ID 26/ 25/ 1/ / | Bldg Name | State Use 101
Vision ID 1807 | Account # 1843 | Bldg # 1 | Sec # 1 of 1 | Card # 1 of 1 | Print Date 11/3/2021 4:30:26 PM

CONSTRUCTION DETAIL

Element	Cd	Description
Style	15	OLD STYLE
Model	01	RESIDENTIAL
Grade	C+	AVG. (+)
Stories	2.00	2 STORY
Foundation	1	CONCRETE
Exterior Wall 1	8	BRICK VENR
Exterior Wall 2	4	VINYL
Roof Structure	1	GABLE
Roof Cover	1	ASPHALT SH
Interior Wall 1	2	PLASTER
Interior Wall 2		
Interior Floor 1	4	CARPET
Interior Floor 2		
Heat Fuel	3	ELECTRIC
Heat Type	6	ELECTRC BB
AC Type	01	NONE
Bedrooms	3	
Full Baths	1	
Half Baths	1	
Extra Fixtures	0	
Total Rooms	9	
Bath Style	A	AVERAGE
Half Bath Style	A	AVERAGE
Kitchens	1	
Kitchen Style	A	AVERAGE
Extra Kitchens	0	
Extra Kitchen St		
FBM Sqft	472	
FBM Quality	1	
Fireplaces	0	
WS Flues	2	
Central Vac	0	NO
Frame	1	WOOD

CONSTRUCTION DETAIL (CONTINUED)

Element	Cd	Description
Basement Floor	12	CONCRETE
Bsmt Garage		
#Heat Sys	1.00	
Units	2	

MIXED USE

Code	Description	Percentage
101	ONE FAM	100
		0
		0

COST / MARKET VALUATION

Adj Base Rate	80.17
RCN	209,085
Net Other Adj	
Year Built	1880
Effective Year Built	1975
Depreciation Code	AV
Remodel Rating	
Year Remodeled	
Depreciation %	43
Functional Obsol	
External Obsol	5
Cost Trend Factor	1
Condition	
% Complete	
Overall % Condition	52
RCNLD	108,700
Dep % Ovr	
Dep Ovr Comment	
Misc Imp Ovr	
Misc Imp Ovr Comment	
Cost to Cure Ovr	
Cost to Cure Ovr Comment	

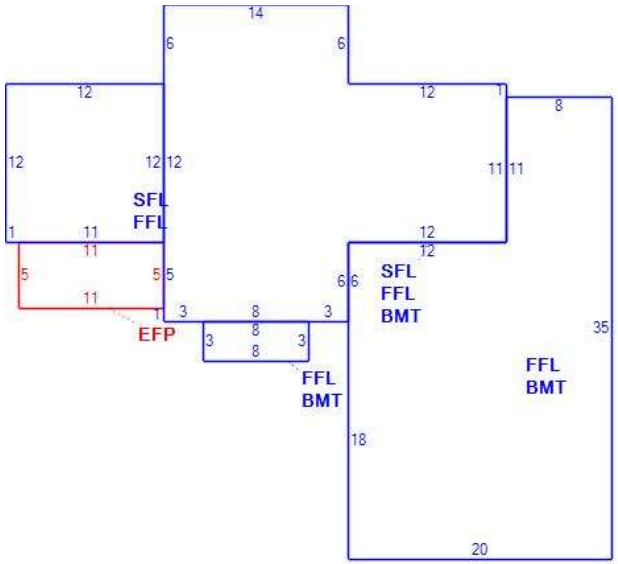

OB - OUTBUILDING & YARD ITEMS(L) / XF - BUILDING EXTRA FEATURES(B)

Code	Description	Su	Sub Type	Lan	Units	Unit Price	Yr Blt	%	Dep.	Cond	Gra	Qual	Apprais Va
03	GARAGE	OB	Outbuildi	L	400	28.18	1943	60	0.00	AV	A	1.00	6,800

BUILDING SUB-AREA SUMMARY SECTION

Subarea	Description	Living	Gross	Eff Area	Unit Cost	Undeprec Value
BMT	BASEMENT	0	1,072		20.15	21,605
EFP	ENCL PORCH	0	55		31.21	1,716
FFL	1ST FLOOR	1,216	1,216		100.96	122,766
SFL	2ND FLOOR	624	624		100.96	62,998
	Ttl Gross Liv / Lease Area	1,840	2,967	2,071		209,085