Property Location 201 GATES AV | Map ID 12B/ 7/ 145/ / | Bldg Name | State Use 101
Vision ID 210 | Account # 214 | Bldg # 1 | Sec # 1 of 1 | Card # 1 of 1 | Print Date 11/3/2021 12:36:42 P

CURRENT OWNER	TOPO TYPE	UTILITY	STREET	LOCATION
TOLEDO FRANCISCO ARMANDO RO				
ROSA LIUGINSA A	**TOPO WET**	**EASEMENT**	**TRAFFIC**	**CORNER**
201 GATES AV				
	DRAINAGE		**VIEW**	**COMMUNITY**
EAST LONGMEADOW MA 01028				

GIS ID F_379025_2857060

SUPPLEMENTAL DATA

Alt Prcl ID		Received	
SP Permit	HO:HO	NIA	
Chapter Land		Field 8	
OC Dates		Field 9	
In+Ex FY		Field 10	
Mailed		Assoc Pid#	

CURRENT ASSESSMENT

Description	Code	Appraised	Assessed
RESIDNTL.	101	186200	186,200
RES LAND	101	91500	91,500
RESIDNTL.	101	700	700
Total		278,400	278,400

1006

EAST LONGMEADOW

RECORD OF OWNERSHIP

	BK-VOL/PAGE		SALE DATE	Q/U	V/I	SALE PRICE	VC
TOLEDO FRANCISCO ARMANDO ROSA	21989	0354	12-15-2017	Q	I	277,000	00
DOE JEFFREY M	20378	0001	08-05-2014	U	I	100	1A
DOE KATHRYN A	19362	0519	07-25-2012	U	I	100	1
DOE JEFFREY M,	18739	0584	04-15-2011	U	I	1	1F
DOE JEFFREY M,	17372	0212	06-24-2008	U	I	1	1A

PREVIOUS ASSESSMENTS (HISTORY)

Year	Code	Assessed	Year	Code	Assessed	Year	Code	Assessed
2021	101	178,900	2020	101	170,000	2019	101	165,600
	101	84,800		101	84,800		101	82,300
	101	700		101	700		101	700
	Total	264,400		Total	255,500		Total	248,600

EXEMPTIONS

Year	Code	Description	Amount
		Total	0.00

OTHER ASSESSMENTS

Code	Description	YEAR	Amount	Comm Int

This signature acknowledges a visit by a Data Collector or Assessor

ASSESSING NEIGHBORHOOD

Nbhd	Nbhd Name	B	Tracing	Batch
0001			101	MA

NOTES

APPRAISED VALUE SUMMARY

Appraised BLDG. Value (Card)	186,200
Appraised Xf (B) Value (Bldg)	0
Appraised Ob (B) Value (Bldg)	700
Appraised Land Value (Bldg)	91,500
Special Land Value	0
Total Appraised Parcel Value	278,400
Valuation Method	C
Adjustment	
Net Total Appraised Parcel Value	278,400

BUILDING PERMIT RECORD

Permit Id	Issue Date	Type	Description	Amount	Insp Date	% Comp	Date Comp	Comments
201702950	11-16-2017	25	WINDOWS	572	04-18-2018	100	04-18-2018	ONE

VISIT / CHANGE HISTORY

Date	Type	Is	Id	Cd	Purpose/Result
04-18-2018			333	2	MEASURED
01-26-2005			311	14	INSPECTED
05-21-2004			319	14	INSPECTED
04-05-2004			250	22	MAILER SENT
03-25-2004			316	2	MEASURED
05-06-1980			500	3	MEAS+INSPCTD

LAND LINE VALUATION SECTION

B	Use Co	Description	Zone	D	Fronta	Depth	Land Units		Unit Price	I. Fact	S.A.	Ac Di	C. Fact	St. Idx	Adj	Notes	Special Pricing				Size A	Adj Unit Pric	Land Value
1	101	ONE FAM	RC				10,000	SF	9.15	1.000	5	LAND	1.00	MA	1.00			0			1.000	9.15	91,500
Total Card Land Units							0.23	AC	Parcel Total Land Area:			0.23									Total Land Value		91,500

Property Location 201 GATES AV | Map ID 12B/ 7/ 145/ / | Bldg Name | State Use 101
Vision ID 210 | Account # 214 | Bldg # 1 | Sec # 1 of 1 | Card # 1 of 1 | Print Date 11/3/2021 12:36:42 P

CONSTRUCTION DETAIL

Element	Cd	Description
Style	05	CAPE
Model	01	RESIDENTIAL
Grade	C+	AVG. (+)
Stories	1.75	1 3/4 STORIES
Foundation	1	CONCRETE
Exterior Wall 1	4	VINYL
Exterior Wall 2	7	BRICK
Roof Structure	1	GABLE
Roof Cover	1	ASPHALT SH
Interior Wall 1	1	DRYWALL
Interior Wall 2		
Interior Floor 1	2	SOFTWOOD
Interior Floor 2	4	CARPET
Heat Fuel	2	GAS
Heat Type	3	FORCED H/W
AC Type	03	FULL
Bedrooms	3	
Full Baths	2	
Half Baths	0	
Extra Fixtures	0	
Total Rooms	7	
Bath Style	A	AVERAGE
Half Bath Style		
Kitchens	1	
Kitchen Style	A	AVERAGE
Extra Kitchens	0	
Extra Kitchen St		
FBM Sqft	842	
FBM Quality	3	
Fireplaces	3	
WS Flues		
Central Vac	1	YES
Frame	1	WOOD

CONSTRUCTION DETAIL (CONTINUED)

Element	Cd	Description
Basement Floor		
Bsmt Garage		
#Heat Sys	1.00	
Units	1	

MIXED USE

Code	Description	Percentage
101	ONE FAM	100
		0
		0

COST / MARKET VALUATION

Adj Base Rate	96.58
RCN	295,585
Net Other Adj	
Year Built	1964
Effective Year Built	1981
Depreciation Code	AG
Remodel Rating	
Year Remodeled	
Depreciation %	37
Functional Obsol	
External Obsol	
Cost Trend Factor	1
Condition	
% Complete	
Overall % Condition	63
RCNLD	186,200
Dep % Ovr	
Dep Ovr Comment	
Misc Imp Ovr	
Misc Imp Ovr Comment	
Cost to Cure Ovr	
Cost to Cure Ovr Comment	

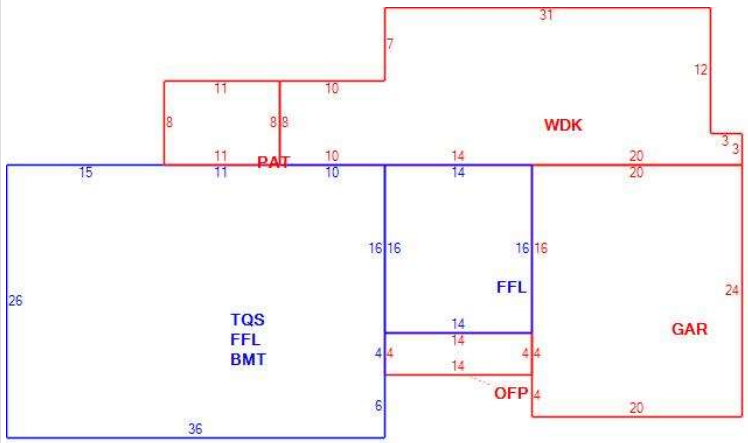

OB - OUTBUILDING & YARD ITEMS(L) / XF - BUILDING EXTRA FEATURES(B)

Code	Description	Su	Sub Type	Lan	Units	Unit Price	Yr Blt	%	Dep.	Cond	Gra	Qual	Apprais Va
02	SHED/FR			L	160	7.48	2000	60	0.00	AV	A	1.00	700

BUILDING SUB-AREA SUMMARY SECTION

Subarea	Description	Living	Gross	Eff Area	Unit Cost	Undeprec Value
BMT	BASEMENT	0	936		25.36	23,733
FFL	1ST FLOOR	1,160	1,160		126.92	147,221
GAR	GARAGE	0	480		50.77	24,368
OFP	OPEN PORCH	0	56		13.60	761
PAT	PATIO	0	88		5.77	508
TQS	3/4 STORY	702	936		95.19	89,094
WDK	WOOD DECK	0	554		17.87	9,899
	Ttl Gross Liv / Lease Area	1,862	4,210	2,329		295,585