Property Location 172 PROSPECT ST | Map ID 28/ 96/ 0/ / | Bldg Name | State Use 101
Vision ID 2175 | Account # 2212 | Bldg # 1 | Sec # 1 of 1 | Card # 1 of 1 | Print Date 11/3/2021 5:26:41 PM

CURRENT OWNER	TOPO TYPE	UTILITY	STREET	LOCATION
WILSON THOMAS R				
WILSON ERICA M	TOPO WET	EASEMENT	TRAFFIC	CORNER
172 PROSPECT ST	DRAINAGE		VIEW	COMMUNITY
EAST LONGMEADOW MA 01028				

GIS ID F_381563_2847995

SUPPLEMENTAL DATA

Alt Prcl ID	Received
SP Permit	NIA
Chapter Land	Field 8
OC Dates	Field 9
In+Ex FY	Field 10
Mailed	Assoc Pid#

CURRENT ASSESSMENT

Description	Code	Appraised	Assessed
RESIDNTL.	101	260100	260,100
RES LAND	101	92800	92,800
Total		352,900	352,900

1006

EAST LONGMEADOW

RECORD OF OWNERSHIP

	BK-VOL/PAGE		SALE DATE	Q/U	V/I	SALE PRICE	VC
WILSON THOMAS R	23749	0291	03-08-2021	U	I	1	1A
WILSON THOMAS R	19173	0173	03-21-2012	U	I	218,000	1A
WILSON THOMAS G JR,	18794	0550	06-06-2011	U	I	100,000	1
MORRISINO DANIEL S,	05116	0015	06-01-1981	U	I	0	

PREVIOUS ASSESSMENTS (HISTORY)

Year	Code	Assessed	Year	Code	Assessed	Year	Code	Assessed
2021	101	196,700	2020	101	194,500	2019	101	189,800
	101	85,700		101	85,700		101	83,000
							101	3,300
	Total	282,400		Total	280,200		Total	276,100

EXEMPTIONS

Year	Code	Description	Amount
		Total	0.00

OTHER ASSESSMENTS

Code	Description	YEAR	Amount	Comm Int

This signature acknowledges a visit by a Data Collector or Assessor

ASSESSING NEIGHBORHOOD

Nbhd	Nbhd Name	B	Tracing	Batch
0001			101	MA

NOTES

RECK 6/22 BP201903434 -NC SHELL ONLY

APPRAISED VALUE SUMMARY

Appraised BLDG. Value (Card)	260,100
Appraised Xf (B) Value (Bldg)	0
Appraised Ob (B) Value (Bldg)	0
Appraised Land Value (Bldg)	92,800
Special Land Value	0
Total Appraised Parcel Value	352,900
Valuation Method	C
Adjustment	
Net Total Appraised Parcel Value	352,900

BUILDING PERMIT RECORD

Permit Id	Issue Date	Type	Description	Amount	Insp Date	% Comp	Date Comp	Comments
201903434	12-23-2019	4	ADDITION	53,000	06-29-2020	0		DEMO GRGE & SU
212	07-21-2011	12	REROOF	25,000				INCLUDES WINDO
10	01-07-2011	MN	Manual Note	1,238				INSULATION
58	03-01-1995	MN	Manual Note	3,700				VINYL SIDE

VISIT / CHANGE HISTORY

Date	Type	Is	Id	Cd	Purpose/Result
06-29-2020			334	15	PERMIT VISIT
08-19-2019			334	2	MEASURED
01-25-2013			317	3	MEAS+INSPCTD
03-28-2012			250	22	MAILER SENT
03-09-2012			317	15	PERMIT VISIT
03-09-2012			317	15	PERMIT VISIT
03-09-2012			317	15	PERMIT VISIT

LAND LINE VALUATION SECTION

B	Use Co	Description	Zone	D	Fronta	Depth	Land Units		Unit Price	I. Fact	S.A.	Ac Di	C. Fact	St. Idx	Adj	Notes	Special Pricing				Size A	Adj Unit Pric	Land Value
1	101	ONE FAM	RA				39,154	SF	2.63	1.000	5	LAND	1.00	MA	1.00			0	TRF2	0.9	1.000	2.37	92,800
						Total Card Land Units	0.90	AC	Parcel Total Land Area:			0.90										Total Land Value	92,800

Property Location 172 PROSPECT ST | Map ID 28/ 96/ 0/ / | Bldg Name | State Use 101
Vision ID 2175 | Account # 2212 | Bldg # 1 | Sec # 1 of 1 | Card # 1 of 1 | Print Date 11/3/2021 5:26:42 PM

CONSTRUCTION DETAIL

Element	Cd	Description
Style	19	RANCH
Model	01	RESIDENTIAL
Grade	B-	GOOD (-)
Stories	1.00	1 STORY
Foundation	1	CONCRETE
Exterior Wall 1	4	VINYL
Exterior Wall 2	8	BRICK VENR
Roof Structure	1	GABLE
Roof Cover	1	ASPHALT SH
Interior Wall 1	1	DRYWALL
Interior Wall 2		
Interior Floor 1	3	HARDWOOD
Interior Floor 2	4	CARPET
Heat Fuel	1	OIL
Heat Type	1	FORCED H/A
AC Type	03	FULL
Bedrooms	3	
Full Baths	3	
Half Baths	1	
Extra Fixtures	0	
Total Rooms	6	
Bath Style	G	GOOD
Half Bath Style	G	GOOD
Kitchens	1	
Kitchen Style	G	GOOD
Extra Kitchens	1	
Extra Kitchen St	A	AVERAGE
FBM Sqft	1315	
FBM Quality	5	
Fireplaces	1	
WS Flues	1	
Central Vac	0	NO
Frame	1	WOOD

CONSTRUCTION DETAIL (CONTINUED)

Element	Cd	Description
Basement Floor	12	CONCRETE
Bsmt Garage	2	
#Heat Sys	1.00	
Units	1	

MIXED USE

Code	Description	Percentage
101	ONE FAM	100
		0
		0

COST / MARKET VALUATION

Adj Base Rate	90.08
RCN	406,441
Net Other Adj	
Year Built	1965
Effective Year Built	1995
Depreciation Code	GV
Remodel Rating	04
Year Remodeled	2011
Depreciation %	23
Functional Obsol	
External Obsol	
Cost Trend Factor	1
Condition	NC
% Complete	64
Overall % Condition	64
RCNLD	260,100
Dep % Ovr	
Dep Ovr Comment	
Misc Imp Ovr	
Misc Imp Ovr Comment	
Cost to Cure Ovr	
Cost to Cure Ovr Comment	

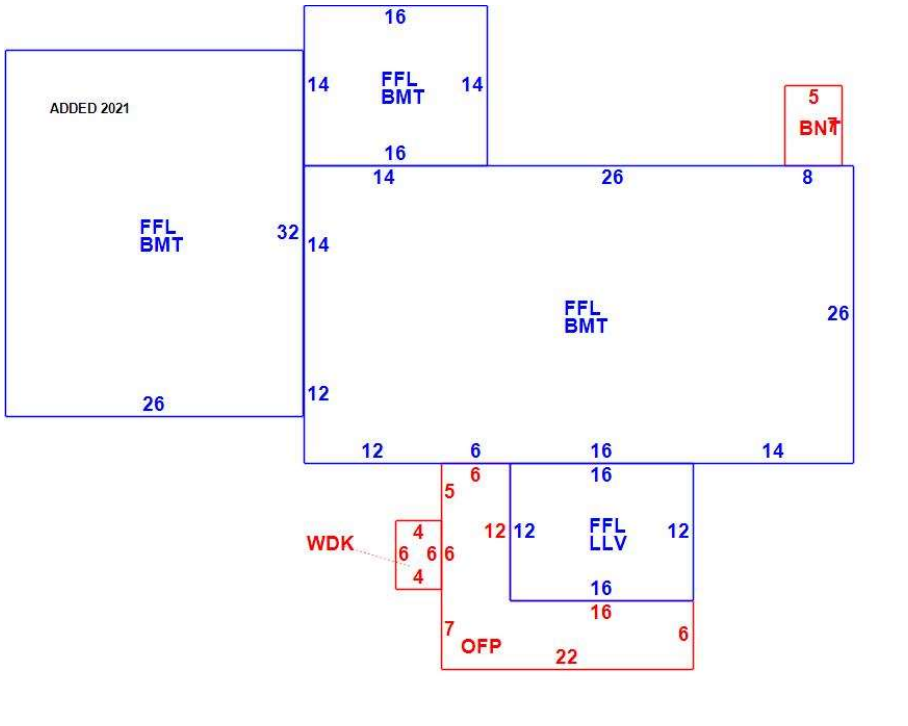

OB - OUTBUILDING & YARD ITEMS(L) / XF - BUILDING EXTRA FEATURES(B)

Code	Description	Su	Sub Type	Lan	Units	Unit Price	Yr Blt	%	Dep.	Cond	Gra	Qual	Apprais Va

BUILDING SUB-AREA SUMMARY SECTION

Subarea	Description	Living	Gross	Eff Area	Unit Cost	Undeprec Value
BMT	BASEMENT	0	2,304		26.84	61,838
BNT	BSMT ENTRY	0	35		7.67	268
FFL	1ST FLOOR	2,496	2,496		134.14	334,811
LLV	LOWR LEVEL	0	192		33.53	6,439
OFP	OPEN PORCH	0	204		13.15	2,683
WDK	WOOD DECK	0	24		16.77	402
	Ttl Gross Liv / Lease Area	2,496	5,255	3,030		406,441