Property Location 263 PROSPECT ST | Map ID 29/ 56/ 1/ / | Bldg Name | State Use 101
Vision ID 2286 | Account # 2326 | Bldg # 1 | Sec # 1 of 1 | Card # 1 of 1 | Print Date 11/3/2021 5:43:00 PM

CURRENT OWNER	TOPO TYPE	UTILITY	STREET	LOCATION
KIRCHNER DOMINIC II TR				
	TOPO WET	EASEMENT	TRAFFIC	CORNER
444A NORTH MAIN ST				
	DRAINAGE		VIEW	COMMUNITY
EAST LONGMEADOW MA 01028				

SUPPLEMENTAL DATA

Alt Prcl ID	Received
SP Permit	NIA
Chapter Land	Field 8
OC Dates	Field 9
In+Ex FY	Field 10
Mailed	Assoc Pid#

GIS ID F_381472_2846191

CURRENT ASSESSMENT

Description	Code	Appraised	Assessed
RESIDNTL.	101	32000	32,000
RES LAND	101	106500	106,500
RESIDNTL.	101	900	900
Total		139,400	139,400

1006
EAST LONGMEADOW

RECORD OF OWNERSHIP

	BK-VOL/PAGE		SALE DATE	Q/U	V/I	SALE PRICE	VC
KIRCHNER DOMINIC II TR	23866	0042	05-05-2021	U	I	85,125	1
MAKARA JOHN H	04322	0163	09-13-1976	U	I	0	

PREVIOUS ASSESSMENTS (HISTORY)

Year	Code	Assessed	Year	Code	Assessed	Year	Code	Assessed
2021	101	30,700	2020	101	29,000	2019	101	28,500
	101	98,400		101	98,400		101	95,700
	101	900		101	900		101	900
	Total	130,000		Total	128,300		Total	125,100

EXEMPTIONS

Year	Code	Description	Amount
		Total	0.00

OTHER ASSESSMENTS

Code	Description	YEAR	Amount	Comm Int

This signature acknowledges a visit by a Data Collector or Assessor

ASSESSING NEIGHBORHOOD

Nbhd	Nbhd Name	B	Tracing	Batch
0001			101	MG

NOTES

RV=RECK DEMO & NEW ROOF? 6/21

PROPERTY CONDEMNED/ANNUAL REVIEW

BC CONFIRMS BP201801766 EXPIRED 12/7/20

APPRAISED VALUE SUMMARY

Appraised BLDG. Value (Card)	32,000
Appraised Xf (B) Value (Bldg)	0
Appraised Ob (B) Value (Bldg)	900
Appraised Land Value (Bldg)	106,500
Special Land Value	0
Total Appraised Parcel Value	139,400
Valuation Method	C
Adjustment	
Net Total Appraised Parcel Value	139,400

BUILDING PERMIT RECORD

Permit Id	Issue Date	Type	Description	Amount	Insp Date	% Comp	Date Comp	Comments
202102703	08-31-2021	5	DEMOLITION	8,000		0		REMV OLD SECTIO
201801766	05-09-2018	5	DEMOLITION	1,000	05-09-2018	0		PARTIAL NO STA
201702021	07-14-2017	12	REROOF	5,000		0		INC SIDING
198	01-01-1986	MN	Manual Note					KITCHEN AD

VISIT / CHANGE HISTORY

Date	Type	Is	Id	Cd	Purpose/Result
05-22-2020			400	16	FIELDREV CHG
05-28-2019			334	15	PERMIT VISIT
05-29-2018			400	15	PERMIT VISIT
04-08-2016			317	15	PERMIT VISIT
04-08-2015			105	15	PERMIT VISIT
04-29-2014	03		250	P2	VISITED
04-04-2014			317	16	FIELDREV CHG

LAND LINE VALUATION SECTION

B	Use Co	Description	Zone	D	Fronta	Depth	Land Units		Unit Price	I. Fact	S.A.	Ac Di	C. Fact	St. Idx	Adj	Notes	Special Pricing				Size A	Adj Unit Pric	Land Value
1	101	ONE FAM	RA				29,990	SF	3.31	1.190	7	LAND	1.00	MG	1.00			0	TRF2	0.9	1.000	3.55	106,500
						Total Card Land Units	0.69	AC	Parcel Total Land Area:			0.69										Total Land Value	106,500

Property Location 263 PROSPECT ST | Map ID 29/ 56/ 1/ / | Bldg Name | State Use 101
Vision ID 2286 | Account # 2326 | Bldg # 1 | Sec # 1 of 1 | Card # 1 of 1 | Print Date 11/3/2021 5:43:00 PM

CONSTRUCTION DETAIL

Element	Cd	Description
Style	06	COLONIAL
Model	01	RESIDENTIAL
Grade	C	AVERAGE
Stories	2.00	2 STORY
Foundation	3	MASONRY
Exterior Wall 1	4	VINYL
Exterior Wall 2	1	WOOD SHING
Roof Structure	1	GABLE
Roof Cover	1	ASPHALT SH
Interior Wall 1	2	PLASTER
Interior Wall 2	1	DRYWALL
Interior Floor 1	2	SOFTWOOD
Interior Floor 2	12	CONCRETE
Heat Fuel	2	GAS
Heat Type	1	FORCED H/A
AC Type	03	FULL
Bedrooms	2	
Full Baths	2	
Half Baths	0	
Extra Fixtures	0	
Total Rooms	5	
Bath Style	A	AVERAGE
Half Bath Style		
Kitchens	1	
Kitchen Style	A	AVERAGE
Extra Kitchens	0	
Extra Kitchen St		
FBM Sqft	545	
FBM Quality	3	
Fireplaces	0	
WS Flues	1	
Central Vac	0	NO
Frame	1	WOOD

CONSTRUCTION DETAIL (CONTINUED)

Element	Cd	Description
Basement Floor		
Bsmt Garage		
#Heat Sys	1.00	
Units	1	

MIXED USE

Code	Description	Percentage
101	ONE FAM	100
		0
		0

COST / MARKET VALUATION

Adj Base Rate	84.68
RCN	320,093
Net Other Adj	
Year Built	1750
Effective Year Built	1947
Depreciation Code	PR
Remodel Rating	
Year Remodeled	
Depreciation %	70
Functional Obsol	
External Obsol	5
Cost Trend Factor	1
Condition	NC
% Complete	10
Overall % Condition	10
RCNLD	32,000
Dep % Ovr	
Dep Ovr Comment	
Misc Imp Ovr	
Misc Imp Ovr Comment	
Cost to Cure Ovr	
Cost to Cure Ovr Comment	

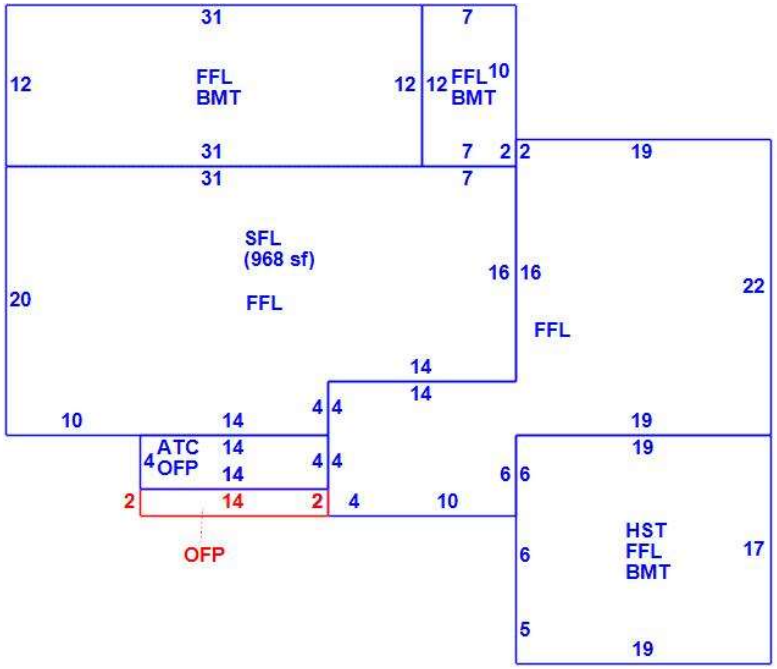

OB - OUTBUILDING & YARD ITEMS(L) / XF - BUILDING EXTRA FEATURES(B)

Code	Description	Su	Sub Type	Lan	Units	Unit Price	Yr Blt	%	Dep.	Cond	Gra	Qual	Apprais Va
02	SHED/FR			L	144	7.48	1981	50	0.00	FR	A	1.00	500
40	LEAN-TO			L	112	5.75	1981	60	0.00	AV	A	1.00	400

BUILDING SUB-AREA SUMMARY SECTION

Subarea	Description	Living	Gross	Eff Area	Unit Cost	Undeprec Value
ATC	ATTIC	14	56		23.89	1,338
BMT	BASEMENT	0	779		19.14	14,910
FFL	1ST FLOOR	2,041	2,041		95.58	195,076
HST	HALF STORY	162	323		47.94	15,484
OFP	OPEN PORCH	0	84		9.10	765
SFL	2ND FLOOR	968	968		95.58	92,520
	Ttl Gross Liv / Lease Area	3,185	4,251	3,349		320,093