Property Location 316 PROSPECT ST | Map ID 30/ 25/ 0/ / | Bldg Name | State Use 101
Vision ID 2679 | Account # 2725 | Bldg # 1 | Sec # 1 of 1 | Card # 1 of 1 | Print Date 11/3/2021 6:44:57 PM

CURRENT OWNER	TOPO TYPE	UTILITY	STREET	LOCATION
MCCREARY DANIEL L TR				
	TOPO WET	EASEMENT	TRAFFIC	CORNER
316 PROSPECT ST				
	DRAINAGE		VIEW	COMMUNITY
EAST LONGMEADOW MA 01028				

SUPPLEMENTAL DATA

Alt Prcl ID	Received
SP Permit	NIA
Chapter Land	Field 8
OC Dates	Field 9
In+Ex FY	Field 10
Mailed	Assoc Pid#

GIS ID F_382423_2845194

CURRENT ASSESSMENT

Description	Code	Appraised	Assessed
RESIDNTL.	101	480400	480,400
RES LAND	101	113100	113,100
RESIDNTL.	101	36500	36,500
Total		630,000	630,000

1006

EAST LONGMEADOW

RECORD OF OWNERSHIP

	BK-VOL/PAGE		SALE DATE	Q/U	V/I	SALE PRICE	VC
MCCREARY DANIEL L TR	18030	0065	10-15-2009	U	I	1	1A
MCCREARY DANIEL L +,	08946	0225	09-21-1994	U	I	292,000	1
TITLOW FRANKLIN BUDD +	08778	0306	03-22-1994	U	I	1	1F
TITLOW FRANKLIN BUDD +	06113	0560	06-11-1986	U	I	206,000	
VON OEYEN	05132	0001	07-01-1981	U	I	0	

PREVIOUS ASSESSMENTS (HISTORY)

Year	Code	Assessed	Year	Code	Assessed	Year	Code	Assessed
2021	101	462,000	2020	101	439,900	2019	101	428,800
	101	105,100		101	105,100		101	102,300
	101	36,500		101	36,500		101	36,500
	Total	603,600		Total	581,500		Total	567,600

EXEMPTIONS

Year	Code	Description	Amount
		Total	0.00

OTHER ASSESSMENTS

Code	Description	YEAR	Amount	Comm Int

This signature acknowledges a visit by a Data Collector or Assessor

ASSESSING NEIGHBORHOOD

Nbhd	Nbhd Name	B	Tracing	Batch
0001			101	MG

NOTES

94 SALE INCLUDES PARCEL 30-24-0.
EXCELLENT CONDITION, 12`GAZEBO, 28X16
ADDITION, 2ND HEAT SYSTEM FH AIR 25% OF
HOUSE.

APPRAISED VALUE SUMMARY

Appraised BLDG. Value (Card)	480,400
Appraised Xf (B) Value (Bldg)	0
Appraised Ob (B) Value (Bldg)	36,500
Appraised Land Value (Bldg)	113,100
Special Land Value	0
Total Appraised Parcel Value	630,000
Valuation Method	C
Adjustment	
Net Total Appraised Parcel Value	630,000

BUILDING PERMIT RECORD

Permit Id	Issue Date	Type	Description	Amount	Insp Date	% Comp	Date Comp	Comments
201702659	10-06-2017	4	ADDITION	277,000	02-28-2018	100	02-28-2018	INC REMODEL
356	11-12-2008	9	ALTERATION	2,463				BLOWN IN INSULAT
234	07-30-2007	12	REROOF	7,400				
58	04-14-2003	11	POOL	35,000				
47	04-04-2003	10	SHED	6,111				
45	03-21-2001	4	ADDITION	87,500				MASTER BED RM &
156	07-01-1991	MN	Manual Note	3,000				ADDITION

VISIT / CHANGE HISTORY

Date	Type	Is	Id	Cd	Purpose/Result
02-28-2018			333	15	PERMIT VISIT
01-07-2009			317	15	PERMIT VISIT
01-07-2009			317	15	PERMIT VISIT
02-01-2008			317	15	PERMIT VISIT
04-12-2004			317	14	INSPECTED
03-18-2004			AO	22	MAILER SENT
02-02-2004			296	15	PERMIT VISIT

LAND LINE VALUATION SECTION

B	Use Co	Description	Zone	D	Fronta	Depth	Land Units		Unit Price	I. Fact	S.A.	Ac Di	C. Fact	St. Idx	Adj	Notes	Special Pricing				Size A	Adj Unit Pric	Land Value
1	101	ONE FAM	RAA				40,000	SF	2.58	1.190	7	LAND	1.00	MG	1.00			0	TRF1	0.9	1.000	2.76	110,400
1	101	ONE FAM	RAA				0.430	AC	7,000	1.000	0		0.90	MG	1.00	TOP2		0			1.000	6,300	2,700
						Total Card Land Units	1.35	AC	Parcel Total Land Area:			1.35										Total Land Value	113,100

Property Location 316 PROSPECT ST | Map ID 30/ 25/ 0/ / | Bldg Name | State Use 101
Vision ID 2679 | Account # 2725 | Bldg # 1 | Sec # 1 of 1 | Card # 1 of 1 | Print Date 11/3/2021 6:44:57 PM

CONSTRUCTION DETAIL

Element	Cd	Description
Style	06	COLONIAL
Model	01	RESIDENTIAL
Grade	B+	GOOD (+)
Stories	2.50	2 1/2 STORIES
Foundation	1	CONCRETE
Exterior Wall 1	7	BRICK
Exterior Wall 2	2	CLAPBOARD
Roof Structure	1	GABLE
Roof Cover	1	ASPHALT SH
Interior Wall 1	2	PLASTER
Interior Wall 2	1	DRYWALL
Interior Floor 1	3	HARDWOOD
Interior Floor 2	4	CARPET
Heat Fuel	1	OIL
Heat Type	3	FORCED H/W
AC Type	03	FULL
Bedrooms	5	
Full Baths	3	
Half Baths	0	
Extra Fixtures	2	
Total Rooms	10	
Bath Style	V	VERY GOOD
Half Bath Style		
Kitchens	1	
Kitchen Style	V	V GOOD
Extra Kitchens	0	
Extra Kitchen St		
FBM Sqft	1725	
FBM Quality	3	
Fireplaces	3	
WS Flues		
Central Vac	0	NO
Frame	1	WOOD

CONSTRUCTION DETAIL (CONTINUED)

Element	Cd	Description
Basement Floor	12	CONCRETE
Bsmt Garage	2	
#Heat Sys	2.00	
Units	1	

MIXED USE

Code	Description	Percentage
101	ONE FAM	100
		0
		0

COST / MARKET VALUATION

Adj Base Rate	73.28
RCN	552,228
Net Other Adj	
Year Built	1950
Effective Year Built	2005
Depreciation Code	EX
Remodel Rating	04
Year Remodeled	2017
Depreciation %	13
Functional Obsol	
External Obsol	
Cost Trend Factor	1
Condition	
% Complete	
Overall % Condition	87
RCNLD	480,400
Dep % Ovr	
Dep Ovr Comment	
Misc Imp Ovr	
Misc Imp Ovr Comment	
Cost to Cure Ovr	
Cost to Cure Ovr Comment	

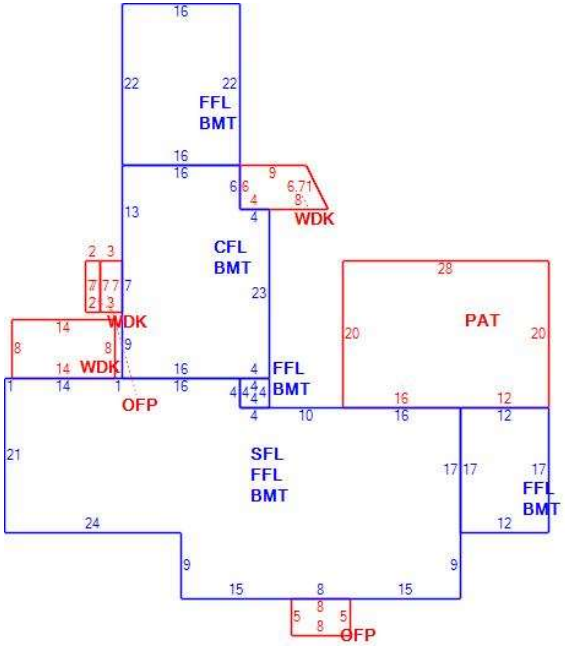

OB - OUTBUILDING & YARD ITEMS(L) / XF - BUILDING EXTRA FEATURES(B)

Code	Description	Su	Sub Type	Lan	Units	Unit Price	Yr Blt	%	Dep.	Cond	Gra	Qual	Apprais Va
23	POOL HSE			L	240	36.80	2003	70	0.00	GD	A	1.00	6,200
12	POOL I-G			L	800	40.00	2003	70	0.00	GD	G	1.25	28,000
2	GAZEBO			L	144	18.00	2000	70	0.00	GD	G	1.25	2,300

BUILDING SUB-AREA SUMMARY SECTION

Subarea	Description	Living	Gross	Eff Area	Unit Cost	Undeprec Value
BMT	BASEMENT	0	2,652		23.07	61,192
CFL	CATHEDRAL CE	556	556		118.99	66,157
FFL	1ST FLOOR	2,096	2,096		115.46	241,997
OFP	OPEN PORCH	0	61		11.36	693
PAT	PATIO	0	560		5.77	3,233
SFL	2ND FLOOR	1,524	1,524		115.46	175,956
WDK	WOOD DECK	0	189		15.88	3,002
	Ttl Gross Liv / Lease Area	4,176	7,638	4,783		552,228