Property Location 55 DEVONSHIRE TR | Map ID 31/ 11/ 7AR/ / | Bldg Name | State Use 101
Vision ID 2695 | Account # 2741 | Bldg # 1 | Sec # 1 of 1 | Card # 1 of 1 | Print Date 11/3/2021 6:47:39 PM

CURRENT OWNER	TOPO TYPE	UTILITY	STREET	LOCATION
BROWN WILLIAM A LE				
	TOPO WET	EASEMENT	TRAFFIC	CORNER
55 DEVONSHIRE TR				
	DRAINAGE		VIEW	COMMUNITY
EAST LONGMEADOW MA 01028				

SUPPLEMENTAL DATA

Alt Prcl ID	Received
SP Permit	NIA
Chapter Land	Field 8
OC Dates	Field 9
In+Ex FY	Field 10
Mailed	Assoc Pid#

GIS ID F_382955_2843015

CURRENT ASSESSMENT

Description	Code	Appraised	Assessed
RESIDNTL.	101	335200	335,200
RES LAND	101	181400	181,400
Total		516,600	516,600

1006

EAST LONGMEADOW

RECORD OF OWNERSHIP

	BK-VOL/PAGE		SALE DATE	Q/U	V/I	SALE PRICE	VC
BROWN WILLIAM A LE	10704	0204	03-30-1999	U	V	1	1A
BROWN WILLIAM A,	09864	0298	05-19-1997	U	V	80,000	
DAVIS JOHN H + STEPHEN A	09348	0253	12-27-1995	U	V	1	1B

PREVIOUS ASSESSMENTS (HISTORY)

Year	Code	Assessed	Year	Code	Assessed	Year	Code	Assessed
2021	101	321,100	2020	101	311,300	2019	101	302,000
	101	167,800		101	167,800		101	163,000
	Total	488,900		Total	479,100		Total	465,000

EXEMPTIONS

Year	Code	Description	Amount
		Total	0.00

OTHER ASSESSMENTS

Code	Description	YEAR	Amount	Comm Int

This signature acknowledges a visit by a Data Collector or Assessor

ASSESSING NEIGHBORHOOD

Nbhd	Nbhd Name	B	Tracing	Batch
0001			101	NS

NOTES

SUB DIV #778 SUB DIV #807 - SUB DIV 952

APPRAISED VALUE SUMMARY

Appraised BLDG. Value (Card)	335,200
Appraised Xf (B) Value (Bldg)	0
Appraised Ob (B) Value (Bldg)	0
Appraised Land Value (Bldg)	181,400
Special Land Value	0
Total Appraised Parcel Value	516,600
Valuation Method	C
Adjustment	
Net Total Appraised Parcel Value	516,600

BUILDING PERMIT RECORD

Permit Id	Issue Date	Type	Description	Amount	Insp Date	% Comp	Date Comp	Comments
201201862	04-13-2012	GEN	GENERATOR	15,000				
67	05-01-1997	MN	Manual Note	205,500				DWELLING

VISIT / CHANGE HISTORY

Date	Type	Is	Id	Cd	Purpose/Result
07-10-2019		1	334	3	MEAS+INSPCTD
06-15-2012			317	15	PERMIT VISIT
03-11-2004			105	2	MEASURED
09-02-2003			274	3	MEAS+INSPCTD
01-16-1998			181	2	MEASURED

LAND LINE VALUATION SECTION

B	Use Co	Description	Zone	D	Fronta	Depth	Land Units		Unit Price	I. Fact	S.A.	Ac Di	C. Fact	St. Idx	Adj	Notes	Special Pricing				Size A	Adj Unit Pric	Land Value
1	101	ONE FAM	RAA				40,000	SF	2.58	1.750	2	LAND	1.00	NS	1.00			0			1.000	4.52	180,800
1	101	ONE FAM	RAA				0.080	AC	7,000	1.000	0		1.00	NS	1.00			0			1.000	7,000	600
						Total Card Land Units	1.00	AC	Parcel Total Land Area:			1.00										Total Land Value	181,400

Property Location 55 DEVONSHIRE TR | Map ID 31/ 11/ 7AR/ / | Bldg Name | State Use 101
Vision ID 2695 | Account # 2741 | Bldg # 1 | Sec # 1 of 1 | Card # 1 of 1 | Print Date 11/3/2021 6:47:40 PM

CONSTRUCTION DETAIL

Element	Cd	Description
Style	19	RANCH
Model	01	RESIDENTIAL
Grade	B-	GOOD (-)
Stories	1.00	1 STORY
Foundation	1	CONCRETE
Exterior Wall 1	4	VINYL
Exterior Wall 2		
Roof Structure	1	GABLE
Roof Cover	1	ASPHALT SH
Interior Wall 1	1	DRYWALL
Interior Wall 2		
Interior Floor 1	3	HARDWOOD
Interior Floor 2	4	CARPET
Heat Fuel	2	GAS
Heat Type	1	FORCED H/A
AC Type	03	FULL
Bedrooms	3	
Full Baths	2	
Half Baths	1	
Extra Fixtures	0	
Total Rooms	7	
Bath Style	G	GOOD
Half Bath Style	G	GOOD
Kitchens	1	
Kitchen Style	G	GOOD
Extra Kitchens	0	
Extra Kitchen St		
FBM Sqft	402	
FBM Quality	3	
Fireplaces	0	
WS Flues		
Central Vac	0	NO
Frame	1	WOOD

CONSTRUCTION DETAIL (CONTINUED)

Element	Cd	Description
Basement Floor	12	CONCRETE
Bsmt Garage		
#Heat Sys	1.00	
Units	1	

MIXED USE

Code	Description	Percentage
101	ONE FAM	100
		0
		0

COST / MARKET VALUATION

Adj Base Rate	81.86
RCN	389,821
Net Other Adj	
Year Built	1997
Effective Year Built	2004
Depreciation Code	GD
Remodel Rating	
Year Remodeled	
Depreciation %	14
Functional Obsol	
External Obsol	
Cost Trend Factor	1
Condition	
% Complete	
Overall % Condition	86
RCNLD	335,200
Dep % Ovr	
Dep Ovr Comment	
Misc Imp Ovr	
Misc Imp Ovr Comment	
Cost to Cure Ovr	
Cost to Cure Ovr Comment	

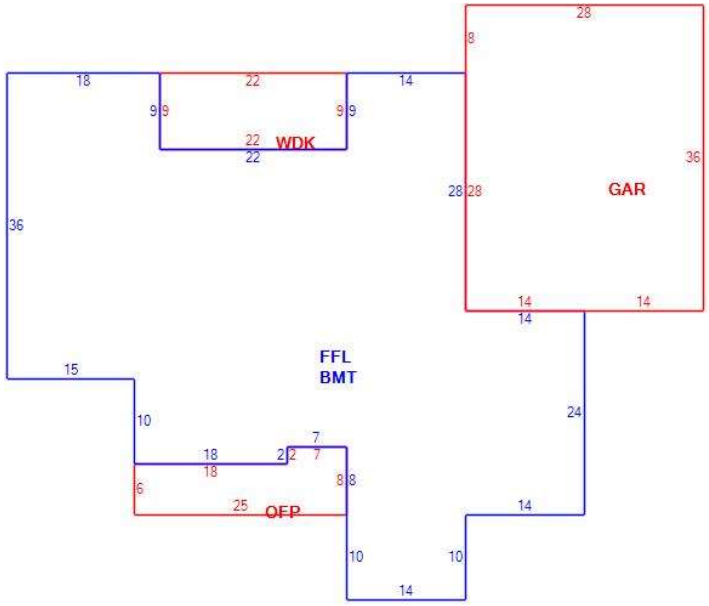

OB - OUTBUILDING & YARD ITEMS(L) / XF - BUILDING EXTRA FEATURES(B)

Code	Description	Su	Sub Type	Lan	Units	Unit Price	Yr Blt	%	Dep.	Cond	Gra	Qual	Apprais Va
GEN	GENERATO			B	0	0.00	2006	86	1.00	AV	A	1.00	0

BUILDING SUB-AREA SUMMARY SECTION

Subarea	Description	Living	Gross	Eff Area	Unit Cost	Undeprec Value
BMT	BASEMENT	0	2,682		21.26	57,011
FFL	1ST FLOOR	2,682	2,682		106.36	285,266
GAR	GARAGE	0	1,008		42.52	42,864
OFP	OPEN PORCH	0	164		10.38	1,702
WDK	WOOD DECK	0	198		15.04	2,978
	Ttl Gross Liv / Lease Area	2,682	6,734	3,665		389,821