Property Location 15 MEADOWLARK DR | Map ID 57/ 9/ 37/ / | Bldg Name | State Use 101
Vision ID 4368 | Account # 4437 | Bldg # 1 | Sec # 1 of 1 | Card # 1 of 1 | Print Date 11/3/2021 11:03:25 P

CURRENT OWNER	TOPO TYPE	UTILITY	STREET	LOCATION
GRIFFIN JOHN P				
GRIFFIN KATHLEEN MARY	TOPO WET	EASEMENT	TRAFFIC	CORNER
15 MEADOWLARK DR	DRAINAGE		VIEW	COMMUNITY
EAST LONGMEADOW MA 01028				

SUPPLEMENTAL DATA

Alt Prcl ID	Received
SP Permit	NIA
Chapter Land	Field 8
OC Dates	Field 9
In+Ex FY	Field 10
Mailed	Assoc Pid#

GIS ID F_388333_2840173

CURRENT ASSESSMENT

Description	Code	Appraised	Assessed
RESIDNTL.	101	394900	394,900
RES LAND	101	149900	149,900
Total		544,800	544,800

1006

EAST LONGMEADOW

RECORD OF OWNERSHIP

	BK-VOL/PAGE		SALE DATE	Q/U	V/I	SALE PRICE	VC
GRIFFIN JOHN P	16369	0337	12-04-2006	U	I	1	1A
GRIFFIN,JOHN P	11936	0182	10-26-2001	U	I	422,500	
PANASUK ROBERT R + JANICE L,	00000	09613	09-06-1996	U	I	326,000	
COMBS JAMES + KARYN MCGUI	07725	0573	06-11-1991	U	V	70,000	
BARIBEAU ROLAND J +	00000	0000		U		0	

PREVIOUS ASSESSMENTS (HISTORY)

Year	Code	Assessed	Year	Code	Assessed	Year	Code	Assessed
2021	101	378,500	2020	101	358,600	2019	101	348,700
	101	139,500		101	139,500		101	135,500
	Total	518,000		Total	498,100		Total	484,200

EXEMPTIONS

Year	Code	Description	Amount
		Total	0.00

OTHER ASSESSMENTS

Code	Description	YEAR	Amount	Comm Int

This signature acknowledges a visit by a Data Collector or Assessor

ASSESSING NEIGHBORHOOD

Nbhd	Nbhd Name	B	Tracing	Batch
0001			101	NV

NOTES

SUB DIV #588,589

APPRAISED VALUE SUMMARY

Appraised BLDG. Value (Card)	394,900
Appraised Xf (B) Value (Bldg)	0
Appraised Ob (B) Value (Bldg)	0
Appraised Land Value (Bldg)	149,900
Special Land Value	0
Total Appraised Parcel Value	544,800
Valuation Method	C
Adjustment	
Net Total Appraised Parcel Value	544,800

BUILDING PERMIT RECORD

Permit Id	Issue Date	Type	Description	Amount	Insp Date	% Comp	Date Comp	Comments
328	10-18-2005	20	WOOD STOVE	1,500				
38	03-01-1993	MN	Manual Note	140,000				DWELLING

VISIT / CHANGE HISTORY

Date	Type	Is	Id	Cd	Purpose/Result
04-13-2018			333	2	MEASURED
10-31-2008			317	14	INSPECTED
10-24-2008			317	2	MEASURED
02-23-2008			317	14	INSPECTED
01-23-2006			311	15	PERMIT VISIT
03-22-2002			250	22	MAILER SENT
11-19-2001			247	2	MEASURED

LAND LINE VALUATION SECTION

B	Use Co	Description	Zone	D	Fronta	Depth	Land Units		Unit Price	I. Fact	S.A.	Ac Di	C. Fact	St. Idx	Adj	Notes	Special Pricing				Size A	Adj Unit Pric	Land Value
1	101	ONE FAM	MULT				40,000	SF	2.58	1.400	9	LAND	1.00	NV	1.00			0			1.000	3.61	144,400
1	101	ONE FAM	MULT				1.300	AC	7,000	1.000	0		0.60	NV	1.00	ESM2/WET3		0			1.000	4,200	5,500
						Total Card Land Units	2.22	AC	Parcel Total Land Area:			2.22										Total Land Value	149,900

Property Location 15 MEADOWLARK DR | Map ID 57/ 9/ 37/ / | Bldg Name | State Use 101
Vision ID 4368 | Account # 4437 | Bldg # 1 | Sec # 1 of 1 | Card # 1 of 1 | Print Date 11/3/2021 11:03:26 P

CONSTRUCTION DETAIL

Element	Cd	Description
Style	06	COLONIAL
Model	01	RESIDENTIAL
Grade	B	GOOD
Stories	2.00	2 STORY
Foundation	1	CONCRETE
Exterior Wall 1	4	VINYL
Exterior Wall 2		
Roof Structure	1	GABLE
Roof Cover	1	ASPHALT SH
Interior Wall 1	1	DRYWALL
Interior Wall 2		
Interior Floor 1	4	CARPET
Interior Floor 2	3	HARDWOOD
Heat Fuel	2	GAS
Heat Type	1	FORCED H/A
AC Type	03	FULL
Bedrooms	4	
Full Baths	3	
Half Baths	0	
Extra Fixtures	3	
Total Rooms	10	
Bath Style	G	GOOD
Half Bath Style		
Kitchens	1	
Kitchen Style	G	GOOD
Extra Kitchens	0	
Extra Kitchen St		
FBM Sqft		
FBM Quality		
Fireplaces	1	
WS Flues		
Central Vac	1	YES
Frame	1	WOOD

CONSTRUCTION DETAIL (CONTINUED)

Element	Cd	Description
Basement Floor	12	CONCRETE
Bsmt Garage		
#Heat Sys	1.00	
Units	1	

MIXED USE

Code	Description	Percentage
101	ONE FAM	100
		0
		0

COST / MARKET VALUATION

Adj Base Rate	74.04
RCN	464,633
Net Other Adj	
Year Built	1993
Effective Year Built	2003
Depreciation Code	GD
Remodel Rating	
Year Remodeled	
Depreciation %	15
Functional Obsol	
External Obsol	
Cost Trend Factor	1
Condition	
% Complete	
Overall % Condition	85
RCNLD	394,900
Dep % Ovr	
Dep Ovr Comment	
Misc Imp Ovr	
Misc Imp Ovr Comment	
Cost to Cure Ovr	
Cost to Cure Ovr Comment	

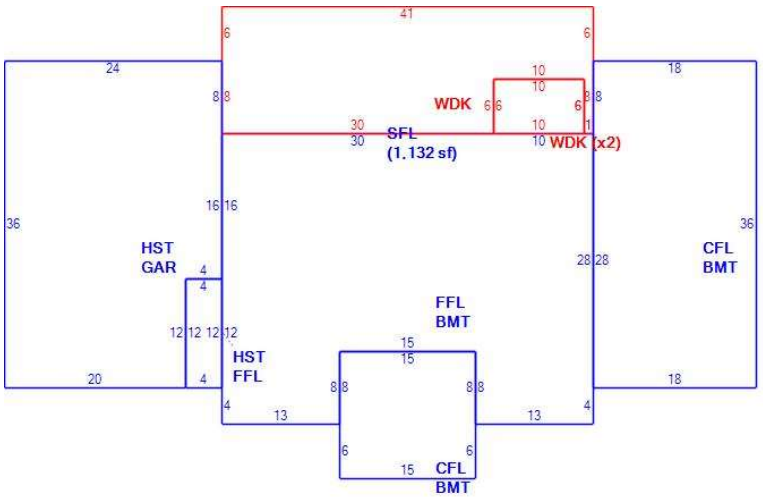

OB - OUTBUILDING & YARD ITEMS(L) / XF - BUILDING EXTRA FEATURES(B)

Code	Description	Su	Sub Type	Lan	Units	Unit Price	Yr Blt	%	Dep.	Cond	Gra	Qual	Apprais Va

BUILDING SUB-AREA SUMMARY SECTION

Subarea	Description	Living	Gross	Eff Area	Unit Cost	Undeprec Value
BMT	BASEMENT	0	2,050		20.59	42,211
CFL	CATHEDRAL CE	858	858		106.07	91,012
FFL	1ST FLOOR	1,240	1,240		102.95	127,663
GAR	GARAGE	0	816		41.13	33,563
HST	HALF STORY	432	864		51.48	44,476
SFL	2ND FLOOR	1,132	1,132		102.95	116,544
WDK	WOOD DECK	0	634		14.45	9,163
	Ttl Gross Liv / Lease Area	3,662	7,594	4,513		464,633