Property Location 20 GREENWICH RD | Map ID 59/ 24/ 6/ / | Bldg Name | State Use 101
Vision ID 4451 | Account # 4523 | Bldg # 1 | Sec # 1 of 1 | Card # 1 of 1 | Print Date 11/3/2021 11:16:06 P

CURRENT OWNER	TOPO TYPE	UTILITY	STREET	LOCATION
MORNEAU MICHAEL J				
MORNEAU YVETTE S	TOPO WET	EASEMENT	TRAFFIC	CORNER
20 GREENWICH RD	DRAINAGE		VIEW	COMMUNITY
EAST LONGMEADOW MA 01028				

SUPPLEMENTAL DATA

Alt Prcl ID	Received
SP Permit	NIA
Chapter Land	Field 8
OC Dates	Field 9
In+Ex FY	Field 10
Mailed	Assoc Pid#

GIS ID F_389061_2856287

CURRENT ASSESSMENT

Description	Code	Appraised	Assessed
RESIDNTL.	101	273300	273,300
RES LAND	101	136600	136,600
Total		409,900	409,900

1006

EAST LONGMEADOW

RECORD OF OWNERSHIP

	BK-VOL/PAGE		SALE DATE	Q/U	V/I	SALE PRICE	VC
MORNEAU MICHAEL J	06933	0537	08-15-1988	U	V	79,500	
RANALDI	05435	0287	05-13-1983	U	I	0	1

PREVIOUS ASSESSMENTS (HISTORY)

Year	Code	Assessed	Year	Code	Assessed	Year	Code	Assessed
2021	101	261,600	2020	101	250,500	2019	101	243,400
	101	126,200		101	126,200		101	122,600
	Total	387,800		Total	376,700		Total	366,000

EXEMPTIONS

Year	Code	Description	Amount
		Total	0.00

OTHER ASSESSMENTS

Code	Description	YEAR	Amount	Comm Int

This signature acknowledges a visit by a Data Collector or Assessor

ASSESSING NEIGHBORHOOD

Nbhd	Nbhd Name	B	Tracing	Batch
0001			101	NV

NOTES

APPRAISED VALUE SUMMARY

Appraised BLDG. Value (Card)	273,300
Appraised Xf (B) Value (Bldg)	0
Appraised Ob (B) Value (Bldg)	0
Appraised Land Value (Bldg)	136,600
Special Land Value	0
Total Appraised Parcel Value	409,900
Valuation Method	C
Adjustment	
Net Total Appraised Parcel Value	409,900

BUILDING PERMIT RECORD

Permit Id	Issue Date	Type	Description	Amount	Insp Date	% Comp	Date Comp	Comments
201302189	06-17-2013	12	REROOF	9,780	06-02-2014	100	06-02-2014	
61	04-19-1996	17	DECK	3,500				DECK
340	11-01-1988	2	DWELLING	70,000		0		SFR

VISIT / CHANGE HISTORY

Date	Type	Is	Id	Cd	Purpose/Result
06-02-2014			317	15	PERMIT VISIT
07-24-2008			250	P1	PHONE MESSAG
06-20-2008			317	3	MEAS+INSPCTD
06-13-2008			317	1	LEFT NOTICE
04-02-2002			274	3	MEAS+INSPCTD
03-22-2002			250	22	MAILER SENT
12-20-1996			107	15	PERMIT VISIT

LAND LINE VALUATION SECTION

B	Use Co	Description	Zone	D	Fronta	Depth	Land Units		Unit Price	I. Fact	S.A.	Ac Di	C. Fact	St. Idx	Adj	Notes	Special Pricing				Size A	Adj Unit Pric	Land Value
1	101	ONE FAM	RA				25,542	SF	3.82	1.400	9	LAND	1.00	NV	1.00			0			1.000	5.35	136,600
Total Card Land Units							0.59	AC	Parcel Total Land Area:			0.59									Total Land Value		136,600

Property Location 20 GREENWICH RD | Map ID 59/ 24/ 6/ / | Bldg Name | State Use 101
Vision ID 4451 | Account # 4523 | Bldg # 1 | Sec # 1 of 1 | Card # 1 of 1 | Print Date 11/3/2021 11:16:07 P

CONSTRUCTION DETAIL

Element	Cd	Description
Style	05	CAPE
Model	01	RESIDENTIAL
Grade	C+	AVG. (+)
Stories	1.75	1 3/4 STORIES
Foundation	1	CONCRETE
Exterior Wall 1	4	VINYL
Exterior Wall 2		
Roof Structure	1	GABLE
Roof Cover	1	ASPHALT SH
Interior Wall 1	1	DRYWALL
Interior Wall 2		
Interior Floor 1	3	HARDWOOD
Interior Floor 2	4	CARPET
Heat Fuel	1	OIL
Heat Type	3	FORCED H/W
AC Type	01	NONE
Bedrooms	4	
Full Baths	3	
Half Baths	0	
Extra Fixtures	0	
Total Rooms	9	
Bath Style	A	AVERAGE
Half Bath Style		
Kitchens	1	
Kitchen Style	A	AVERAGE
Extra Kitchens	0	
Extra Kitchen St		
FBM Sqft		
FBM Quality		
Fireplaces	1	
WS Flues		
Central Vac	0	NO
Frame	1	WOOD

CONSTRUCTION DETAIL (CONTINUED)

Element	Cd	Description
Basement Floor	12	CONCRETE
Bsmt Garage		
#Heat Sys	1.00	
Units	1	

MIXED USE

Code	Description	Percentage
101	ONE FAM	100
		0
		0

COST / MARKET VALUATION

Adj Base Rate	89.37
RCN	337,409
Net Other Adj	
Year Built	1988
Effective Year Built	1999
Depreciation Code	GD
Remodel Rating	
Year Remodeled	
Depreciation %	19
Functional Obsol	
External Obsol	
Cost Trend Factor	1
Condition	
% Complete	
Overall % Condition	81
RCNLD	273,300
Dep % Ovr	
Dep Ovr Comment	
Misc Imp Ovr	
Misc Imp Ovr Comment	
Cost to Cure Ovr	
Cost to Cure Ovr Comment	

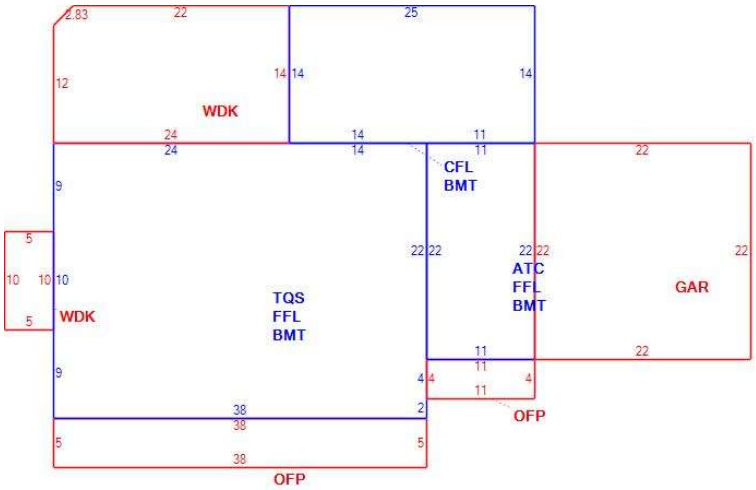

OB - OUTBUILDING & YARD ITEMS(L) / XF - BUILDING EXTRA FEATURES(B)

Code	Description	Su	Sub Type	Lan	Units	Unit Price	Yr Blt	%	Dep.	Cond	Gra	Qual	Apprais Va

BUILDING SUB-AREA SUMMARY SECTION

Subarea	Description	Living	Gross	Eff Area	Unit Cost	Undeprec Value
ATC	ATTIC	61	242		27.19	6,580
BMT	BASEMENT	0	1,656		21.56	35,704
CFL	CATHEDRAL CE	350	350		111.26	38,940
FFL	1ST FLOOR	1,306	1,306		107.87	140,875
GAR	GARAGE	0	484		43.24	20,926
OFP	OPEN PORCH	0	234		10.60	2,481
TQS	3/4 STORY	798	1,064		80.90	86,078
WDK	WOOD DECK	0	384		15.17	5,825
	Ttl Gross Liv / Lease Area	2,515	5,720	3,128		337,409