Property Location 38 BROOKHAVEN DR | Map ID 70/ 43/ 14/ / | Bldg Name | State Use 101
Vision ID 5124 | Account # 5201 | Bldg # 1 | Sec # 1 of 1 | Card # 1 of 1 | Print Date 11/4/2021 8:39:57 AM

CURRENT OWNER	TOPO TYPE	UTILITY	STREET	LOCATION
MICHAUD KENNETH R				
MICHAUD VICTORIA	TOPO WET	EASEMENT	TRAFFIC	CORNER
38 BROOKHAVEN DR	DRAINAGE		VIEW	COMMUNITY
EAST LONGEADOW MA 01028				

1006

EAST LONGMEADOW

SUPPLEMENTAL DATA

Alt Prcl ID	Received
SP Permit	NIA
Chapter Land	Field 8
OC Dates	Field 9
In+Ex FY	Field 10
Mailed	Assoc Pid#

GIS ID F_390984_2857291

CURRENT ASSESSMENT

Description	Code	Appraised	Assessed
RESIDNTL.	101	157900	157,900
RES LAND	101	129100	129,100
RESIDNTL.	101	17500	17,500
Total		304,500	304,500

RECORD OF OWNERSHIP

	BK-VOL/PAGE		SALE DATE	Q/U	V/I	SALE PRICE	VC
MICHAUD KENNETH R	19345	0313	07-13-2012	U	I	280,000	00
ZIEMBIENSKI DANIEL E,	16473	0354	01-16-2007	U	I	1	1A
ZIEMBIENSKI ,STANLEY TRUSTEE OF	10474	0420	10-05-1998	U	I	1	1A
ZIEMBIENSKI STANLEY F,	08496	0079	07-20-1993	U	I	1	1A
ZIEMBIENSKI STANLEY F +	04966	0363	07-16-1980	U	I	0	

PREVIOUS ASSESSMENTS (HISTORY)

Year	Code	Assessed	Year	Code	Assessed	Year	Code	Assessed
2021	101	151,100	2020	101	142,900	2019	101	138,900
	101	119,900		101	119,900		101	116,700
	101	17,500		101	17,500		101	17,600
	Total	288,500		Total	280,300		Total	273,200

EXEMPTIONS

Year	Code	Description	Amount
		Total	0.00

OTHER ASSESSMENTS

Code	Description	YEAR	Amount	Comm Int

This signature acknowledges a visit by a Data Collector or Assessor

ASSESSING NEIGHBORHOOD

Nbhd	Nbhd Name	B	Tracing	Batch
0001			101	MG

NOTES

APPRAISED VALUE SUMMARY

Appraised BLDG. Value (Card)	157,900
Appraised Xf (B) Value (Bldg)	0
Appraised Ob (B) Value (Bldg)	17,500
Appraised Land Value (Bldg)	129,100
Special Land Value	0
Total Appraised Parcel Value	304,500
Valuation Method	C
Adjustment	
Net Total Appraised Parcel Value	304,500

BUILDING PERMIT RECORD

Permit Id	Issue Date	Type	Description	Amount	Insp Date	% Comp	Date Comp	Comments
201500392	02-25-2015	62	SOLAR	54,825	04-17-2015	100	04-17-2015	
201402625	10-06-2014	91	INSULATION	1,000		0		
201301605	04-30-2013	91	INSULATION	2,000				

VISIT / CHANGE HISTORY

Date	Type	Is	Id	Cd	Purpose/Result
04-17-2015			317	15	PERMIT VISIT
06-07-2013			317	15	PERMIT VISIT
09-07-2012			317	3	MEAS+INSPCTD
05-03-2007			311	14	INSPECTED
04-03-2007			250	22	MAILER SENT
10-26-2006			311	2	MEASURED
04-11-2000			247	14	INSPECTED

LAND LINE VALUATION SECTION

B	Use Co	Description	Zone	D	Fronta	Depth	Land Units		Unit Price	I. Fact	S.A.	Ac Di	C. Fact	St. Idx	Adj	Notes	Special Pricing				Size A	Adj Unit Pric	Land Value
1	101	ONE FAM	RA				40,000	SF	2.58	1.190	7	LAND	1.00	MG	1.00			0			1.000	3.07	122,800
1	101	ONE FAM	RA				0.900	AC	7,000	1.000	0		1.00	MG	1.00			0			1.000	7,000	6,300
						Total Card Land Units	1.82	AC	Parcel Total Land Area:			1.82										Total Land Value	129,100

Property Location 38 BROOKHAVEN DR | Map ID 70/ 43/ 14/ / | Bldg Name | State Use 101
Vision ID 5124 | Account # 5201 | Bldg # 1 | Sec # 1 of 1 | Card # 1 of 1 | Print Date 11/4/2021 8:39:58 AM

CONSTRUCTION DETAIL

Element	Cd	Description
Style	19	RANCH
Model	01	RESIDENTIAL
Grade	C	AVERAGE
Stories	1.00	1 STORY
Foundation	1	CONCRETE
Exterior Wall 1	8	BRICK VENR
Exterior Wall 2	4	VINYL
Roof Structure	1	GABLE
Roof Cover	1	ASPHALT SH
Interior Wall 1	2	PLASTER
Interior Wall 2		
Interior Floor 1	3	HARDWOOD
Interior Floor 2	4	CARPET
Heat Fuel	1	OIL
Heat Type	3	FORCED H/W
AC Type	01	NONE
Bedrooms	3	
Full Baths	2	
Half Baths	0	
Extra Fixtures	0	
Total Rooms	7	
Bath Style	A	AVERAGE
Half Bath Style		
Kitchens	1	
Kitchen Style	A	AVERAGE
Extra Kitchens	0	
Extra Kitchen St		
FBM Sqft		
FBM Quality		
Fireplaces	1	
WS Flues		
Central Vac	0	NO
Frame	1	WOOD

CONSTRUCTION DETAIL (CONTINUED)

Element	Cd	Description
Basement Floor	12	CONCRETE
Bsmt Garage		
#Heat Sys	1.00	
Units	1	

MIXED USE

Code	Description	Percentage
101	ONE FAM	100
		0
		0

COST / MARKET VALUATION

Adj Base Rate	96.40
RCN	250,558
Net Other Adj	
Year Built	1962
Effective Year Built	1981
Depreciation Code	AG
Remodel Rating	
Year Remodeled	
Depreciation %	37
Functional Obsol	
External Obsol	
Cost Trend Factor	1
Condition	
% Complete	
Overall % Condition	63
RCNLD	157,900
Dep % Ovr	
Dep Ovr Comment	
Misc Imp Ovr	
Misc Imp Ovr Comment	
Cost to Cure Ovr	
Cost to Cure Ovr Comment	

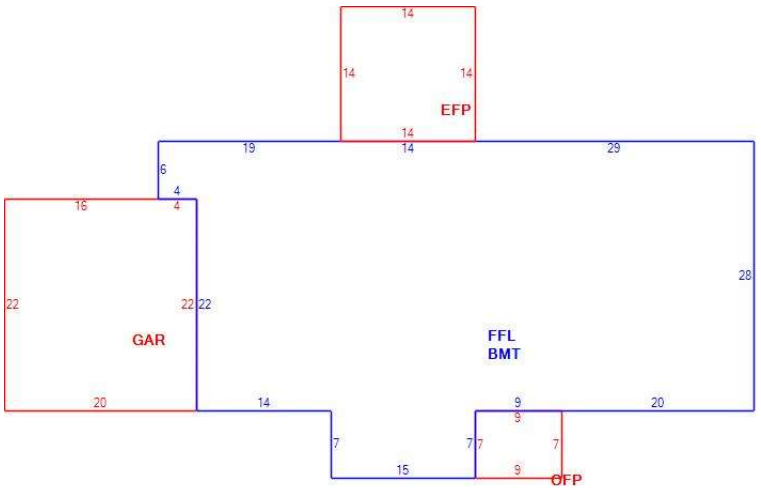

OB - OUTBUILDING & YARD ITEMS(L) / XF - BUILDING EXTRA FEATURES(B)

Code	Description	Su	Sub Type	Lan	Units	Unit Price	Yr Blt	%	Dep.	Cond	Gra	Qual	Apprais Va
03	GARAGE	OB	Outbuildi	L	336	28.18	1969	50	0.00	FR	A	1.00	4,700
15	SHOP			L	784	32.78	1969	50	0.00	FR	A	1.00	12,800
SOL	Solar Panels	EX	Extra Fea	B	1	0.00	1981	63	1.00			0.00	0

BUILDING SUB-AREA SUMMARY SECTION

Subarea	Description	Living	Gross	Eff Area	Unit Cost	Undeprec Value
BMT	BASEMENT	0	1,753		21.39	37,504
EFP	ENCL PORCH	0	196		32.16	6,304
FFL	1ST FLOOR	1,753	1,753		106.85	187,304
GAR	GARAGE	0	440		42.74	18,805
OFP	OPEN PORCH	0	63		10.18	641
	Ttl Gross Liv / Lease Area	1,753	4,205	2,345		250,558