Property Location 295 MILLBROOK DR | Map ID 88/ 1/ 10/ / | Bldg Name | State Use 101
Vision ID 5881 | Account # 5963 | Bldg # 1 | Sec # 1 of 1 | Card # 1 of 1 | Print Date 11/8/2021 3:25:56 PM

CURRENT OWNER	TOPO TYPE	UTILITY	STREET	LOCATION
WANG JIAN YU				
	TOPO WET	EASEMENT	TRAFFIC	CORNER
295 MILLBROOK DR				
	DRAINAGE		VIEW	COMMUNITY
EAST LONGMEADOW MA 01028				

SUPPLEMENTAL DATA	
Alt Prcl ID	Received
SP Permit	NIA
Chapter Land	Field 8
OC Dates	Field 9
In+Ex FY	Field 10
Mailed	Assoc Pid#

GIS ID F_393829_2851144

CURRENT ASSESSMENT

Description	Code	Appraised	Assessed
RESIDNTL.	101	408400	408,400
RES LAND	101	131900	131,900
Total		540,300	540,300

1006

EAST LONGMEADOW

RECORD OF OWNERSHIP

	BK-VOL/PAGE		SALE DATE	Q/U	V/I	SALE PRICE	VC
WANG JIAN YU	37462	LC	07-28-2017	U	I	520,000	1
FERRENTINO MARIO	27250	LC	08-21-1996	U	V	60,000	
DUTIL A INC	00000	0000		U		0	

PREVIOUS ASSESSMENTS (HISTORY)

Year	Code	Assessed	Year	Code	Assessed	Year	Code	Assessed
2021	101	391,800	2020	101	376,200	2019	101	366,100
	101	122,300		101	122,300		101	118,700
	Total	514,100		Total	498,500		Total	484,800

EXEMPTIONS

Year	Code	Description	Amount
		Total	0.00

OTHER ASSESSMENTS

Code	Description	YEAR	Amount	Comm Int

This signature acknowledges a visit by a Data Collector or Assessor

ASSESSING NEIGHBORHOOD

Nbhd	Nbhd Name	B	Tracing	Batch
0001			101	NV

NOTES

SUB DIV #545

APPRAISED VALUE SUMMARY

Appraised BLDG. Value (Card)	408,400
Appraised Xf (B) Value (Bldg)	0
Appraised Ob (B) Value (Bldg)	0
Appraised Land Value (Bldg)	131,900
Special Land Value	0
Total Appraised Parcel Value	540,300
Valuation Method	C
Adjustment	
Net Total Appraised Parcel Value	540,300

BUILDING PERMIT RECORD

Permit Id	Issue Date	Type	Description	Amount	Insp Date	% Comp	Date Comp	Comments
201803001	10-16-2018	62	SOLAR	21,692	06-13-2019	100	11-28-2019	
210	08-22-1996	MN	Manual Note	200,000				DWELLING

VISIT / CHANGE HISTORY

Date	Type	Is	Id	Cd	Purpose/Result
06-13-2019			400	15	PERMIT VISIT
11-16-2017			400	14	INSPECTED
11-14-2008			317	2	MEASURED
11-06-2008			250	22	MAILER SENT
10-06-2005			311	1	LEFT NOTICE
04-03-2000			105	16	FIELDREV CHG
12-02-1999			247	2	MEASURED

LAND LINE VALUATION SECTION

B	Use Co	Description	Zone	D	Fronta	Depth	Land Units		Unit Price	I. Fact	S.A.	Ac Di	C. Fact	St. Idx	Adj	Notes	Special Pricing				Size A	Adj Unit Pric	Land Value
1	101	ONE FAM	RA				16,960	SF	5.56	1.400	9	LAND	1.00	NV	1.00			0			1.000	7.78	131,900
						Total Card Land Units	0.39	AC	Parcel Total Land Area:			0.39										Total Land Value	131,900

Property Location 295 MILLBROOK DR | Map ID 88/ 1/ 10/ / | Bldg Name | State Use 101
Vision ID 5881 | Account # 5963 | Bldg # 1 | Sec # 1 of 1 | Card # 1 of 1 | Print Date 11/8/2021 3:25:57 PM

CONSTRUCTION DETAIL

Element	Cd	Description
Style	06	COLONIAL
Model	01	RESIDENTIAL
Grade	B+	GOOD (+)
Stories	2.00	2 STORY
Foundation	1	CONCRETE
Exterior Wall 1	8	BRICK VENR
Exterior Wall 2	4	VINYL
Roof Structure	2	HIP
Roof Cover	1	ASPHALT SH
Interior Wall 1	1	DRYWALL
Interior Wall 2		
Interior Floor 1	3	HARDWOOD
Interior Floor 2	6	CERAMIC TL
Heat Fuel	2	GAS
Heat Type	1	FORCED H/A
AC Type	03	FULL
Bedrooms	4	
Full Baths	3	
Half Baths	1	
Extra Fixtures	3	
Total Rooms	8	
Bath Style	G	GOOD
Half Bath Style	G	GOOD
Kitchens	1	
Kitchen Style	G	GOOD
Extra Kitchens	0	
Extra Kitchen St		
FBM Sqft	383	
FBM Quality	3	
Fireplaces	1	
WS Flues		
Central Vac	1	YES
Frame	1	WOOD

CONSTRUCTION DETAIL (CONTINUED)

Element	Cd	Description
Basement Floor	12	CONCRETE
Bsmt Garage		
#Heat Sys	1.00	
Units	1	

MIXED USE

Code	Description	Percentage
101	ONE FAM	100
		0
		0

COST / MARKET VALUATION

Adj Base Rate	74.73
RCN	474,921
Net Other Adj	
Year Built	1996
Effective Year Built	2004
Depreciation Code	GD
Remodel Rating	
Year Remodeled	
Depreciation %	14
Functional Obsol	
External Obsol	
Cost Trend Factor	1
Condition	
% Complete	
Overall % Condition	86
RCNLD	408,400
Dep % Ovr	
Dep Ovr Comment	
Misc Imp Ovr	
Misc Imp Ovr Comment	
Cost to Cure Ovr	
Cost to Cure Ovr Comment	

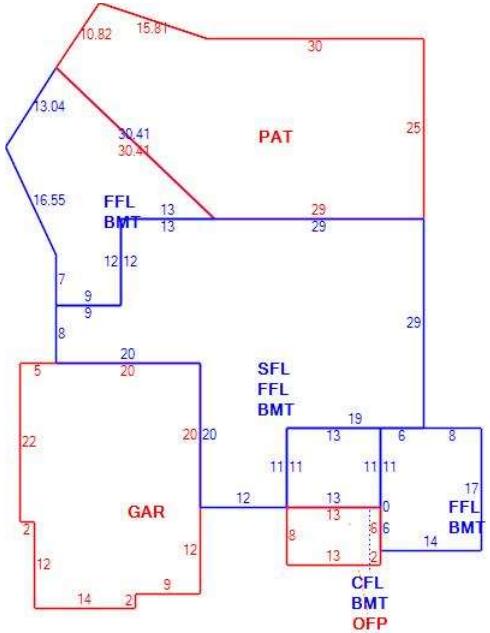

OB - OUTBUILDING & YARD ITEMS(L) / XF - BUILDING EXTRA FEATURES(B)

Code	Description	Su	Sub Type	Lan	Units	Unit Price	Yr Blt	%	Dep.	Cond	Gra	Qual	Apprais Va
SOL	Solar Panels	EX	Extra Fea	B		0.00	2018	86	1.00			0.00	0

BUILDING SUB-AREA SUMMARY SECTION

Subarea	Description	Living	Gross	Eff Area	Unit Cost	Undeprec Value
BMT	BASEMENT	0	2,134		22.23	47,437
CFL	CATHEDRAL CE	143	143		114.20	16,331
FFL	1ST FLOOR	1,991	1,991		111.09	221,185
GAR	GARAGE	0	808		44.41	35,883
OFP	OPEN PORCH	0	104		10.68	1,111
PAT	PATIO	0	1,085		5.53	5,999
SFL	2ND FLOOR	1,323	1,323		111.09	146,976
	Ttl Gross Liv / Lease Area	3,457	7,588	4,275		474,921