Property Location 240 PINEHURST DR | Map ID 80/ 1/ 240/ / | Bldg Name | State Use 102
Vision ID 6358 | Account # 6445 | Bldg # 1 | Sec # 1 of 1 | Card # 1 of 1 | Print Date 11/9/2021 7:58:25 AM

CURRENT OWNER

RICH AUDREY H TR
RICH MARILYN R + JAMES A TR
240 PINEHURST DR

EAST LONGMEADOW MA 01028

TOPO	UTILITIES	STRT / ROAD	LOCATION

SUPPLEMENTAL DATA

Alt Prcl ID	Received
SP Permit	NIA
Chapter La	Field 8
OC Dates	Field 9
In+Ex FY	Field 10
Mailed	
GIS ID F_392090_2841032	Assoc Pid#

CURRENT ASSESSMENT

Description	Code	Assessed	Assessed
RESIDNTL.	102	364,500	364,500
	Total	364,500	364,500

1006
EAST LONGMEADOW, MA

VISION

RECORD OF OWNERSHIP

	BK-VOL/PAGE		SALE DATE	Q/U	V/I	SALE PRICE	VC
RICH AUDREY H TR	23587	0286	12-11-2020	U	I	1	1A
RICH AUDREY H	11355	0008	09-29-2000	U	I	325,147	
ELMS RESIDENTIAL,CONDOMINIUM TRUST	10338	0117	06-24-1998	U	V	1	1B
ROUTE 83 DEVELOPMENT CORP	00000	0000		U		0	

PREVIOUS ASSESSMENTS (HISTORY)

Year	Code	Assessed	Year	Code	Assessed V	Year	Code	Assessed
2021	102	353,000	2020	102	342,800	2019	102	349,800
	Total	353,000		Total	342,800		Total	349,800

EXEMPTIONS

Year	Code	Description	Amount
		Total	0.00

OTHER ASSESSMENTS

Code	Description	Number	Amount	Comm Int

This signature acknowledges a visit by a Data Collector or Assessor

ASSESSING NEIGHBORHOOD

Nbhd	Nbhd Name	B	Tracing	Batch
0001			102	EL

NOTES

BUILDING 12 - WALK OUT BMT
ENTRY DENIED UNLESS WE CALL FOR APPT-
PARTITIONS ONLY IN AN ALREADY FINISHED
PART OF BMT

APPRAISED VALUE SUMMARY

Appraised Bldg. Value (Card)	364,500
Appraised Xf (B) Value (Bldg)	0
Appraised Ob (B) Value (Bldg)	0
Appraised Land Value (Bldg)	0
Special Land Value	0
Total Appraised Parcel Value	364,500
Valuation Method	C
Total Appraised Parcel Value	364,500

BUILDING PERMIT RECORD

Permit Id	Issue Date	Type	Description	Amount	Insp Date	% Comp	Date Comp	Comments
142	05-07-2008	7	REMODEL	19,050		0		FINISH BMT
60	04-06-2000	2	DWELLING	153,333		0		CONDO

VISIT / CHANGE HISTORY

Date	Id	Type	Is	Cd	Purpose/Result
02-19-2009	317			15	PERMIT VISIT
02-16-2006	311			14	INSPECTED
02-09-2006	311			1	LEFT NOTICE
06-20-2001	105			14	INSPECTED
05-31-2001	247			11	ENTRY DENIED

LAND LINE VALUATION SECTION

B	Use Code	Description	Zone	Land Type	Land Units		Unit Price	Size Adj	Site Index	Cond.	Nbhd.	Nbhd. Adj	Notes	Location Adjustment		Adj Unit P	Land Value
1	102	CONDO	PUR	SITE	0	SF	0	1.00000		1.00	EL	1.000			0.0000	0	0
				Total Card Land Units	0	SF	Parcel Total Land Area			0.00					Total Land Value		0

Property Location 240 PINEHURST DR | Map ID 80/ 1/ 240/ / | Bldg Name | State Use 102
Vision ID 6358 | Account # 6445 | Bldg # 1 | Sec # 1 of 1 | Card # 1 of 1 | Print Date 11/9/2021 7:58:26 AM

CONSTRUCTION DETAIL

Element	Cd	Description
Style	08	CONDO-TNHS
Model	05	RES CONDO
Grade	C+	AVG. (+)
Stories	2.00	2 Story
Foundation	1	CONCRETE
Interior Wall 1	1	DRYWALL
Interior Wall 2		
Interior Floor 1	4	CARPET
Interior Floor 2		
Heat Fuel	2	GAS
Heat Type	1	FORCED H/A
AC Type	03	FULL
Bedrooms	3	
Full Baths	3	
Half Baths	1	
Extra Fixtures	0	
Total Rooms	5	
Bath Style	G	GOOD
Num Kitchens	1	
Kitchen Style	G	GOOD
FBM Sqft	1068	
FBM Quality	4	FLA GD
Fireplaces		
WS Flues		
Central Vac		
Frame	1	WOOD
Bsmt Floor	12	CONCRETE
Bsmt Garage		
#Heat Sys	1	
Occupancy	1	
Int Vs Ext		

CONSTRUCTION DETAIL (CONTINUED)

Element	Cd	Description

CONDO DATA

Parcel Id	6769	C	0020	Owne	
	THE ELMS	B	1	S	1

Adjust Type	Code	Description	Factor%
Unit Type C			
Unit Locatio	E	END UNIT	

COST / MARKET VALUATION

Adj Base Rate	124.67
Building Value New	400,574
Year Built	2000
Effective Year Built	2009
Depreciation Code	GD
Remodel Rating	
Year Remodeled	
Depreciation %	9
Functional Obsol	
External Obsol	
Trend Factor	1
Condition	
Condition %	
Percent Good	91
Cns Sect Rcnld	364,500
Dep % Ovr	
Dep Ovr Comment	
Misc Imp Ovr	
Misc Imp Ovr Comment	
Cost to Cure Ovr	
Cost to Cure Ovr Comment	

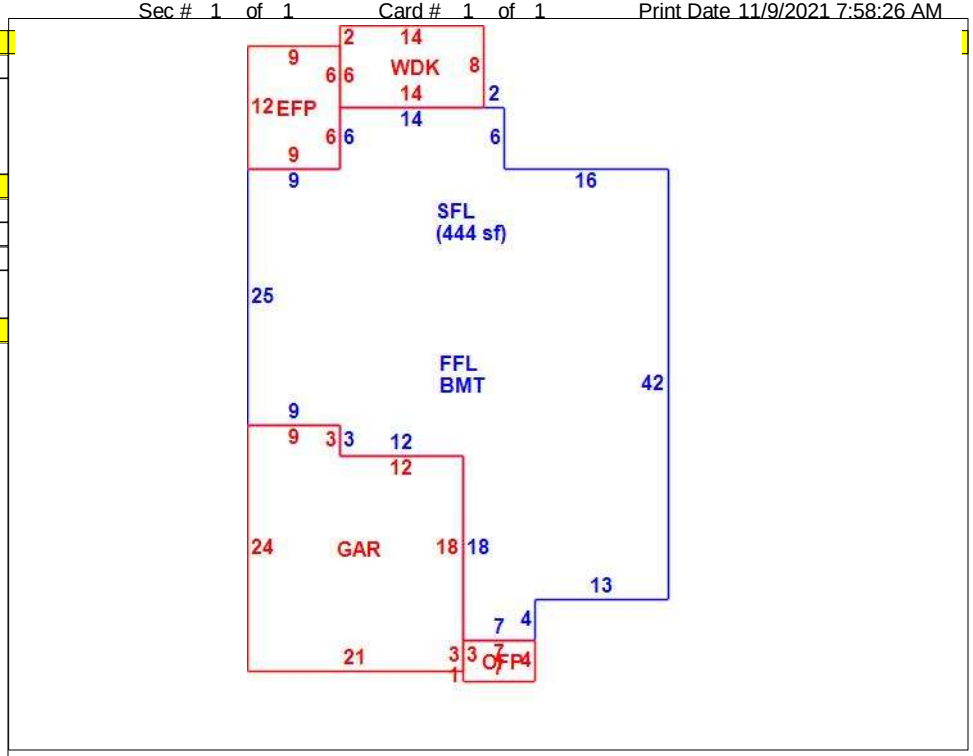

OB - OUTBUILDING & YARD ITEMS(L) / XF - BUILDING EXTRA FEATURES(B)

Code	Description	L/B	Units	Unit Price	Yr Blt	Cond. Cd	% Gd	Grade	Grade Adj.	Appr. Value

BUILDING SUB-AREA SUMMARY SECTION

Code	Description	Living Area	Floor Area	Eff Area	Unit Cost	Undeprec Value
BMT	BASEMENT	0	1,525		31.89	48,637
EFP	ENCL PORCH	0	108		47.25	5,103
FFL	1ST FLOOR	1,525	1,525		159.46	243,183
GAR	GARAGE	0	468		63.72	29,820
OFP	OPEN PORCH	0	28		17.09	478
SFL	2ND FLOOR	444	444		159.46	70,802
WDK	WOOD DECK	0	112		22.78	2,551
	Ttl Gross Liv / Lease Area	1,969	4,210	2,512		400,574