Property Location 10 BROADLEAF CR | Map ID 7/ 5/ 1/26/ / | Bldg Name | State Use 102
Vision ID 6689 | Account # 6806 | Bldg # 1 | Sec # 1 of 1 | Card # 1 of 1 | Print Date 11/9/2021 8:45:26 AM

CURRENT OWNER	TOPO	UTILITIES	STRT / ROAD	LOCATION
DROMGOLD ROMONA S		1 TYPCL		
DROMGOLD JACK SCOTT				
10 BROADLEAF CR				
EAST LONGMEADOW MA 01028				

SUPPLEMENTAL DATA

Alt Prcl ID		Received	
SP Permit		NIA	
Chapter La		Field 8	
OC Dates		Field 9	
In+Ex FY		Field 10	
Mailed			
GIS ID	F_376625_2845743	Assoc Pid#	

CURRENT ASSESSMENT

Description	Code	Assessed	Assessed
RESIDNTL.	102	400,400	400,400
	Total	400,400	400,400

1006
EAST LONGMEADOW, MA

VISION

RECORD OF OWNERSHIP

	BK-VOL/PAGE		SALE DATE	Q/U	V/I	SALE PRICE	VC
DROMGOLD ROMONA S	24123	0157	09-15-2021	Q	I	484,500	00
MATRONI MARY	16882	0131	08-22-2007	U	I	453,000	
D R CHESTNUT LLC,	16302	0279	11-02-2006	U	I	3,562,500	1
RUGBY PROPERTIES LLC,	00000	0000		U		0	

PREVIOUS ASSESSMENTS (HISTORY)

Year	Code	Assessed	Year	Code	Assessed V	Year	Code	Assessed
2021	102	388,300	2020	102	374,300	2019	102	389,400
	Total	388,300		Total	374,300		Total	389,400

EXEMPTIONS

Year	Code	Description	Amount
		Total	0.00

OTHER ASSESSMENTS

Code	Description	Number	Amount	Comm Int

This signature acknowledges a visit by a Data Collector or Assessor

APPRAISED VALUE SUMMARY

Appraised Bldg. Value (Card)	400,400
Appraised Xf (B) Value (Bldg)	0
Appraised Ob (B) Value (Bldg)	0
Appraised Land Value (Bldg)	0
Special Land Value	0
Total Appraised Parcel Value	400,400
Valuation Method	C
Total Appraised Parcel Value	400,400

ASSESSING NEIGHBORHOOD

Nbhd	Nbhd Name	B	Tracing	Batch
0001			102	FC

NOTES

PHASE I-UNIT 26

BUILDING PERMIT RECORD

Permit Id	Issue Date	Type	Description	Amount	Insp Date	% Comp	Date Comp	Comments
45	03-20-2007	2	DWELLING	190,000				OC 8/14/2007

VISIT / CHANGE HISTORY

Date	Id	Type	Is	Cd	Purpose/Result
01-25-2008	317			3	MEAS+INSPCTD
01-25-2008	317			15	PERMIT VISIT

LAND LINE VALUATION SECTION

B	Use Code	Description	Zone	Land Type	Land Units		Unit Price	Size Adj	Site Index	Cond.	Nbhd.	Nbhd. Adj	Notes	Location Adjustment		Adj Unit P	Land Value
1	102	CONDO	PAR	SITE	0	SF	0	1.00000		1.00	FC	1.000			0.0000	0	0
				Total Card Land Units	0	SF	Parcel Total Land Area			0.00					Total Land Value		0

Property Location 10 BROADLEAF CR | Map ID 7/ 5/ 1/26/ / | Bldg Name | State Use 102
Vision ID 6689 | Account # 6806 | Bldg # 1 | Sec # 1 of 1 | Card # 1 of 1 | Print Date 11/9/2021 8:45:26 AM

CONSTRUCTION DETAIL

Element	Cd	Description
Style	07	CONDO-GRDN
Model	05	RES CONDO
Grade	C+	AVG. (+)
Stories	1.00	1 STORY
Foundation	1	CONCRETE
Interior Wall 1	1	DRYWALL
Interior Wall 2		
Interior Floor 1	3	HARDWOOD
Interior Floor 2		
Heat Fuel	2	GAS
Heat Type	1	FORCED H/A
AC Type	03	FULL
Bedrooms	2	
Full Baths	2	
Half Baths	0	
Extra Fixtures	2	
Total Rooms	5	
Bath Style	G	GOOD
Num Kitchens	1	
Kitchen Style	G	GOOD
FBM Sqft		
FBM Quality		
Fireplaces	1	
WS Flues		
Central Vac		0
Frame	1	WOOD
Bsmt Floor	12	CONCRETE
Bsmt Garage		
#Heat Sys	1	
Occupancy	1	
Int Vs Ext	S	

CONSTRUCTION DETAIL (CONTINUED)

Element	Cd	Description

CONDO DATA

Parcel Id	5049	C	0010	Owne	
	CHESTNUT	B	1	S	1

Adjust Type	Code	Description	Factor%
Unit Type C			
Unit Locatio	D	DETACHED	

COST / MARKET VALUATION

Adj Base Rate	118.19
Building Value New	425,932
Year Built	2007
Effective Year Built	2012
Depreciation Code	GD
Remodel Rating	
Year Remodeled	
Depreciation %	6
Functional Obsol	
External Obsol	
Trend Factor	1
Condition	
Condition %	
Percent Good	94
Cns Sect Rcnld	400,400
Dep % Ovr	
Dep Ovr Comment	
Misc Imp Ovr	
Misc Imp Ovr Comment	
Cost to Cure Ovr	
Cost to Cure Ovr Comment	

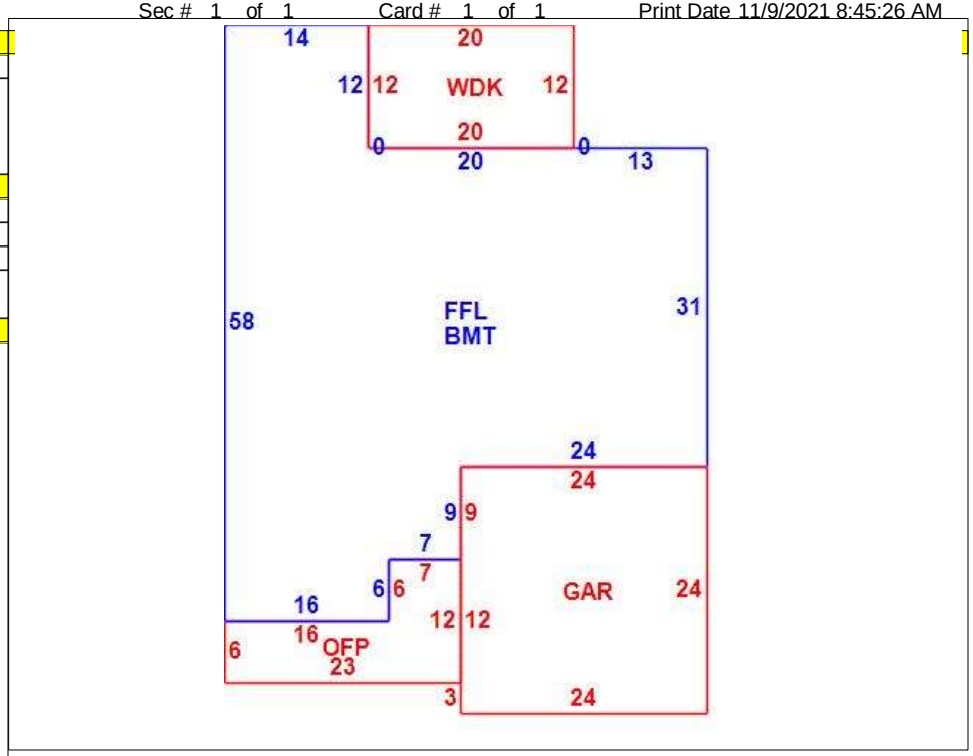

OB - OUTBUILDING & YARD ITEMS(L) / XF - BUILDING EXTRA FEATURES(B)

Code	Description	L/B	Units	Unit Price	Yr Blt	Cond. Cd	% Gd	Grade	Grade Adj.	Appr. Value

BUILDING SUB-AREA SUMMARY SECTION

Code	Description	Living Area	Floor Area	Eff Area	Unit Cost	Undeprec Value
BMT	BASEMENT	0	1,928		32.85	63,332
FFL	1ST FLOOR	1,928	1,928		164.07	316,332
GAR	GARAGE	0	576		65.52	37,737
OFP	OPEN PORCH	0	180		16.41	2,953
WDK	WOOD DECK	0	240		23.24	5,578
	Ttl Gross Liv / Lease Area	1,928	4,852	2,596		425,932