Property Location 117 PROSPECT ST | Map ID 28/ 16/ 2/ / | Bldg Name | State Use 101
Vision ID 2086 | Account # 2123 | Bldg # 1 | Sec # 1 of 1 | Card # 1 of 1 | Print Date 12/12/2022 4:11:14 P

CURRENT OWNER	TOPO TYPE	UTILITY	STREET	LOCATION
MAGDYCZ KEVIN P				
	TOPO WET	EASEMENT	TRAFFIC	CORNER
117 PROSPECT ST				
	DRAINAGE		VIEW	COMMUNITY
EAST LONGMEADOW MA 01028				

SUPPLEMENTAL DATA

Alt Prcl ID	Received
SP Permit	NIA
Chapter Land	Field 8
OC Dates	Field 9
In+Ex FY	Field 10
Mailed	Assoc Pid#

GIS ID F_381084_2848911

CURRENT ASSESSMENT

Description	Code	Appraised	Assessed
RESIDNTL.	101	188000	188,000
RES LAND	101	103000	103,000
RESIDNTL.	101	500	500
Total		291,500	291,500

1006

EAST LONGMEADOW

RECORD OF OWNERSHIP

	BK-VOL/PAGE		SALE DATE	Q/U	V/I	SALE PRICE	VC
MAGDYCZ KEVIN P	19507	0497	10-22-2012	U	I	190,000	00
STEVENS RICHARD A ,TRUSTEES	16919	0174	09-11-2007	U	I	1	1A
STEVENS FREDERIC A + EDNA R,	05792	0309	04-11-1985	U	I	90	

PREVIOUS ASSESSMENTS (HISTORY)

Year	Code	Assessed	Year	Code	Assessed	Year	Code	Assessed
2022	101	149,800	2021	101	143,400	2020	101	135,700
	101	93,400		101	86,600		101	86,600
	101	500		101	500		101	500
	Total	243,700		Total	230,500		Total	222,800

EXEMPTIONS

Year	Code	Description	Amount
		Total	0.00

OTHER ASSESSMENTS

Code	Description	YEAR	Amount	Comm Int

This signature acknowledges a visit by a Data Collector or Assessor

APPRAISED VALUE SUMMARY

Appraised BLDG. Value (Card)	188,000
Appraised Xf (B) Value (Bldg)	0
Appraised Ob (B) Value (Bldg)	500
Appraised Land Value (Bldg)	103,000
Special Land Value	0
Total Appraised Parcel Value	291,500
Valuation Method	C
Adjustment	
Net Total Appraised Parcel Value	291,500

ASSESSING NEIGHBORHOOD

Nbhd	Nbhd Name		Tracing	Batch
0001			101	MA

NOTES

SUB DIV 978

BUILDING PERMIT RECORD

Permit Id	Issue Date	Type	Description	Amount	Insp Date	% Comp	Date Comp	Comments
201502841	11-17-2015	25	WINDOWS	3,095	05-13-2016	100	05-13-2016	
291	09-01-1987	MN	Manual Note	3,000				ADDITION
180	01-01-1985	MN	Manual Note					ADDITION

VISIT / CHANGE HISTORY

Date	Type	Is	Id	Cd	Purpose/Result
05-13-2016			317	15	PERMIT VISIT
11-06-2015			317	2	MEASURED
09-23-2003			274	3	MEAS+INSPCTD
04-04-1992			170	3	MEAS+INSPCTD
03-18-1988			130	15	PERMIT VISIT

LAND LINE VALUATION SECTION

B	Use Co	Description	Zone	D	Fronta	Depth	Land Units		Unit Price	I. Fact	S.A.	Ac Di	C. Fact	St. Idx	Adj	Notes	Special Pricing				Size A	Adj Unit Pric	Land Value
1	101	ONE FAM	RC				40,000	SF	2.84	1.000	5	LAND	1.00	MA	1.00			0	TRF2	0.9	1.000	2.56	102,400
1	101	ONE FAM	RC				0.080	AC	7,000.00	1.000	0		1.00	MA	1.00			0			1.000	7,000	600
						Total Card Land Units	1.00	AC	Parcel Total Land Area:	1.00												Total Land Value	103,000

Property Location 117 PROSPECT ST | Map ID 28/ 16/ 2/ / | Bldg Name | State Use 101
Vision ID 2086 | Account # 2123 | Bldg # 1 | Sec # 1 of 1 | Card # 1 of 1 | Print Date 12/12/2022 4:11:14 P

CONSTRUCTION DETAIL

Element	Cd	Description
Style	06	COLONIAL
Model	01	RESIDENTIAL
Grade	C	AVERAGE
Stories	2.00	2 STORY
Foundation	2	CONC BLOCK
Exterior Wall 1	4	VINYL
Exterior Wall 2		
Roof Structure	1	GABLE
Roof Cover	1	ASPHALT SH
Interior Wall 1	2	PLASTER
Interior Wall 2		
Interior Floor 1	3	HARDWOOD
Interior Floor 2	4	CARPET
Heat Fuel	2	GAS
Heat Type	3	FORCED H/W
AC Type	01	NONE
Bedrooms	4	
Full Baths	2	
Half Baths	0	
Extra Fixtures	0	
Total Rooms	8	
Bath Style	A	AVERAGE
Half Bath Style		
Kitchens	1	
Kitchen Style	A	AVERAGE
Extra Kitchens	0	
Extra Kitchen St		
FBM Sqft	219	
FBM Quality	1	
Fireplaces	1	
WS Flues	1	
Central Vac	0	NO
Frame	1	WOOD

CONSTRUCTION DETAIL (CONTINUED)

Element	Cd	Description
Basement Floor	12	CONCRETE
Bsmt Garage	1	
#Heat Sys	1.00	
Units	1	

MIXED USE

Code	Description	Percentage
101	ONE FAM	100
		0
		0

COST / MARKET VALUATION

Adj Base Rate	102.59
RCN	324,149
Net Other Adj	
Year Built	1946
Effective Year Built	1984
Depreciation Code	AG
Remodel Rating	
Year Remodeled	
Depreciation %	37
Functional Obsol	5
External Obsol	
Cost Trend Factor	1
Condition	
% Complete	
Overall % Condition	58
RCNLD	188,000
Dep % Ovr	
Dep Ovr Comment	
Misc Imp Ovr	
Misc Imp Ovr Comment	
Cost to Cure Ovr	
Cost to Cure Ovr Comment	

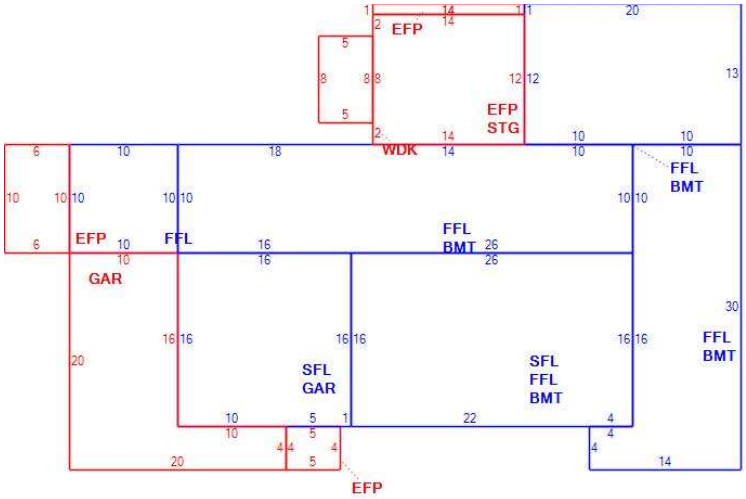

OB - OUTBUILDING & YARD ITEMS(L) / XF - BUILDING EXTRA FEATURES(B)

Code	Description	Su	Sub Type	Lan	Units	Unit Price	Yr Blt	%	Dep.	Cond	Gra	Qual	Apprais Va
02	SHED/FR			L	120	7.48	2004	60	0.00	AV	A	1.00	500

BUILDING SUB-AREA SUMMARY SECTION

Subarea	Description	Living	Gross	Eff Area	Unit Cost	Undeprec Value
BMT	BASEMENT	0	1,412		22.56	31,850
EFP	ENCL PORCH	0	262		56.47	14,796
FFL	1ST FLOOR	1,512	1,512		112.94	170,771
GAR	GARAGE	0	496		45.09	22,363
SFL	2ND FLOOR	672	672		112.94	75,898
STG	STORAGE	0	168		45.04	7,567
WDK	WOOD DECK	0	40		22.59	904
	Ttl Gross Liv / Lease Area	2,184	4,562			324,149