Property Location 22-24 WOODLAWN ST | Map ID 28/ 33/ A/ / | Bldg Name | State Use 104
Vision ID 2105 | Account # 2142 | Bldg # 1 | Sec # 1 of 1 | Card # 1 of 1 | Print Date 12/12/2022 4:14:17 P

CURRENT OWNER	TOPO TYPE	UTILITY	STREET	LOCATION
CROKEN WILLIAM F				
	TOPO WET	EASEMENT	TRAFFIC	CORNER
30 MILL RD				
	DRAINAGE		VIEW	COMMUNITY
EAST LONGMEADOW MA 01028				

GIS ID F_382199_2848913

SUPPLEMENTAL DATA

Alt Prcl ID	Received
SP Permit	NIA
Chapter Land	Field 8
OC Dates	Field 9
In+Ex FY	Field 10
Mailed	Assoc Pid#

CURRENT ASSESSMENT

Description	Code	Appraised	Assessed
RESIDNTL.	104	158300	158,300
RES LAND	104	102100	102,100
RESIDNTL.	104	600	600
Total		261,000	261,000

1006
EAST LONGMEADOW

RECORD OF OWNERSHIP

	BK-VOL/PAGE		SALE DATE	Q/U	V/I	SALE PRICE	VC
CROKEN WILLIAM F	20380	0012	08-07-2014	U	I	1	1A
CROKEN AGNES T LIFE ESTATE	05001	0001	09-26-1980	U	I	0	

PREVIOUS ASSESSMENTS (HISTORY)

Year	Code	Assessed	Year	Code	Assessed	Year	Code	Assessed
2022	104	141,500	2021	104	136,600	2020	104	130,300
	104	92,700		104	85,900		104	85,900
	104	600		104	700		104	700
	Total	234,800		Total	223,200		Total	216,900

EXEMPTIONS

Year	Code	Description	Amount
		Total	0.00

OTHER ASSESSMENTS

Code	Description	YEAR	Amount	Comm Int

This signature acknowledges a visit by a Data Collector or Assessor

ASSESSING NEIGHBORHOOD

Nbhd	Nbhd Name		Tracing	Batch
0001			104	MA

NOTES

APPRAISED VALUE SUMMARY

Appraised BLDG. Value (Card)	158,300
Appraised Xf (B) Value (Bldg)	0
Appraised Ob (B) Value (Bldg)	600
Appraised Land Value (Bldg)	102,100
Special Land Value	0
Total Appraised Parcel Value	261,000
Valuation Method	C
Adjustment	
Net Total Appraised Parcel Value	261,000

BUILDING PERMIT RECORD

Permit Id	Issue Date	Type	Description	Amount	Insp Date	% Comp	Date Comp	Comments

VISIT / CHANGE HISTORY

Date	Type	Is	Id	Cd	Purpose/Result
04-20-2021			333	14	INSPECTED
01-22-2016			105	2	MEASURED
10-30-2003			274	3	MEAS+INSPCTD
07-20-1992			131	14	INSPECTED
05-21-1992			131	11	ENTRY DENIED
01-16-1981			500	3	MEAS+INSPCTD

LAND LINE VALUATION SECTION

B	Use Co	Description	Zone	D	Fronta	Depth	Land Units		Unit Price	I. Fact	S.A.	Ac Di	C. Fact	St. Idx	Adj	Notes	Special Pricing				Size A	Adj Unit Pric	Land Value
1	104	TWO FAM	RC				12,822	SF	7.96	1.000	5	LAND	1.00	MA	1.00			0			1.000	7.96	102,100
Total Card Land Units							0.29	AC	Parcel Total Land Area:			0.29										Total Land Value	102,100

Property Location 22-24 WOODLAWN ST | Map ID 28/ 33/ A/ / | Bldg Name | State Use 104
Vision ID 2105 | Account # 2142 | Bldg # 1 | Sec # 1 of 1 | Card # 1 of 1 | Print Date 12/12/2022 4:14:18 P

CONSTRUCTION DETAIL

Element	Cd	Description
Style	12	MULTI-CONV
Model	03	MULTI-FAMILY
Grade	C	AVERAGE
Stories	2.50	2 1/2 STORIES
Foundation	2	CONC BLOCK
Exterior Wall 1	4	VINYL
Exterior Wall 2		
Roof Structure	1	GABLE
Roof Cover	1	ASPHALT SH
Interior Wall 1	8	PLYWD PANL
Interior Wall 2	4	SOLID WOOD
Interior Floor 1	4	CARPET
Interior Floor 2		
Heat Fuel	2	GAS
Heat Type	1	FORCED H/A
AC Type	01	NONE
Bedrooms	4	
Full Baths	2	
Half Baths	0	
Extra Fixtures	0	
Total Rooms	10	
Bath Style	A	AVERAGE
Half Bath Style		
Kitchens	2	
Kitchen Style	A	AVERAGE
Extra Kitchens	0	
Extra Kitchen St		
FBM Sqft		
FBM Quality		
Fireplaces	1	
WS Flues	1	
Central Vac	0	NO
Frame	1	WOOD

CONSTRUCTION DETAIL (CONTINUED)

Element	Cd	Description
Basement Floor	12	CONCRETE
Bsmt Garage		
#Heat Sys	2.00	
Units	2	

MIXED USE

Code	Description	Percentage
104	TWO FAM	100
		0
		0

COST / MARKET VALUATION

Adj Base Rate	98.93
RCN	277,785
Net Other Adj	
Year Built	1850
Effective Year Built	1978
Depreciation Code	AV
Remodel Rating	
Year Remodeled	
Depreciation %	43
Functional Obsol	
External Obsol	
Cost Trend Factor	1
Condition	
% Complete	
Overall % Condition	57
RCNLD	158,300
Dep % Ovr	
Dep Ovr Comment	
Misc Imp Ovr	
Misc Imp Ovr Comment	
Cost to Cure Ovr	
Cost to Cure Ovr Comment	

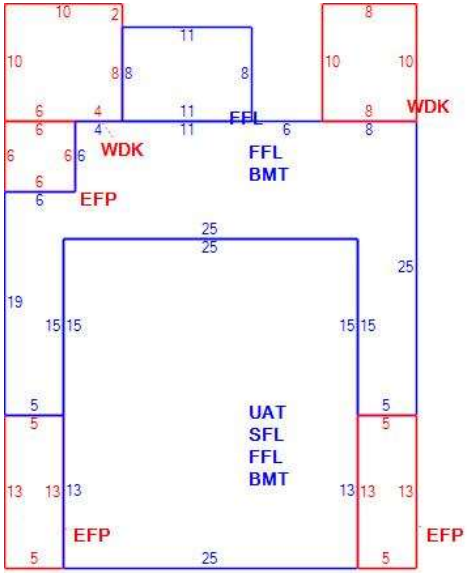

OB - OUTBUILDING & YARD ITEMS(L) / XF - BUILDING EXTRA FEATURES(B)

Code	Description	Su	Sub Type	Lan	Units	Unit Price	Yr Blt	%	Dep.	Cond	Gra	Qual	Apprais Va
02	SHED/FR			L	160	7.48	1970	50	0.00	FR	A	1.00	600

BUILDING SUB-AREA SUMMARY SECTION

Subarea	Description	Living	Gross	Eff Area	Unit Cost	Undeprec Value
BMT	BASEMENT	0	1,164		22.75	26,483
EFP	ENCL PORCH	0	166		56.83	9,434
FFL	1ST FLOOR	1,252	1,252		113.66	142,302
SFL	2ND FLOOR	700	700		113.66	79,562
UAT	UNFIN ATTC	0	700		22.73	15,912
WDK	WOOD DECK	0	180		22.73	4,092
	Ttl Gross Liv / Lease Area	1,952	4,162			277,785