Property Location 111 CHESTNUT ST | Map ID 29/ 35/ A/ / | Bldg Name | State Use 101
Vision ID 2260 | Account # 2300 | Bldg # 1 | Sec # 1 of 1 | Card # 1 of 1 | Print Date 12/12/2022 4:35:34 P

CURRENT OWNER	TOPO TYPE	UTILITY	STREET	LOCATION
DRENTHE DAVID A				
	TOPO WET	EASEMENT	TRAFFIC	CORNER
111 CHESTNUT ST				
	DRAINAGE		VIEW	COMMUNITY
EAST LONGMEADOW MA 01028				

SUPPLEMENTAL DATA

Alt Prcl ID	Received
SP Permit	NIA
Chapter Land	Field 8
OC Dates	Field 9
In+Ex FY	Field 10
Mailed	Assoc Pid#

GIS ID F_382440_2846990

CURRENT ASSESSMENT

Description	Code	Appraised	Assessed
RESIDNTL.	101	206100	206,100
RES LAND	101	114700	114,700
RESIDNTL.	101	1100	1,100
Total		321,900	321,900

1006
EAST LONGMEADOW

RECORD OF OWNERSHIP

	BK-VOL/PAGE		SALE DATE	Q/U	V/I	SALE PRICE	VC
DRENTHE DAVID A	16042	0395	07-12-2006	U	I	285,000	1A
DRENTHE ALBERT J +,	06378	0264	01-30-1987	U	I	142,000	
GOULET	04371	0207	01-07-1977	U	I	0	

PREVIOUS ASSESSMENTS (HISTORY)

Year	Code	Assessed	Year	Code	Assessed	Year	Code	Assessed
2022	101	184,900	2021	101	177,800	2020	101	173,700
	101	105,100		101	98,300		101	98,300
	101	1,100		101	1,100		101	1,100
	Total	291,100		Total	277,200		Total	273,100

EXEMPTIONS

Year	Code	Description	Amount
		Total	0.00

OTHER ASSESSMENTS

Code	Description	YEAR	Amount	Comm Int

This signature acknowledges a visit by a Data Collector or Assessor

ASSESSING NEIGHBORHOOD

Nbhd	Nbhd Name		Tracing	Batch
0001			101	MA

NOTES

APPRAISED VALUE SUMMARY

Appraised BLDG. Value (Card)	206,100
Appraised Xf (B) Value (Bldg)	0
Appraised Ob (B) Value (Bldg)	1,100
Appraised Land Value (Bldg)	114,700
Special Land Value	0
Total Appraised Parcel Value	321,900
Valuation Method	C
Adjustment	
Net Total Appraised Parcel Value	321,900

BUILDING PERMIT RECORD

Permit Id	Issue Date	Type	Description	Amount	Insp Date	% Comp	Date Comp	Comments
201102788	10-18-2011	25	WINDOWS	8,000				15 REPLACEMENT
343	12-14-2000	9	ALTERATION	15,000				REPAIR DUE TO W
342	12-14-2000	22	TEMP HOUSING	3,500				TRAILER
197	07-01-1987	MN	Manual Note	11,000				IG POOL
92	01-01-1986	MN	Manual Note					WOOD STOVE

VISIT / CHANGE HISTORY

Date	Type	Is	Id	Cd	Purpose/Result
03-16-2018			333	2	MEASURED
03-30-2012			317	15	PERMIT VISIT
03-30-2012			317	15	PERMIT VISIT
04-14-2004			319	14	INSPECTED
03-18-2004			AO	22	MAILER SENT
09-16-2003			274	2	MEASURED
02-01-2001			247	15	PERMIT VISIT

LAND LINE VALUATION SECTION

B	Use Co	Description	Zone	D	Fronta	Depth	Land Units		Unit Price	I. Fact	S.A.	Ac Di	C. Fact	St. Idx	Adj	Notes	Special Pricing				Size A	Adj Unit Pric	Land Value
1	101	ONE FAM	RA				40,000	SF	2.84	1.000	5	LAND	1.00	MA	1.00			0	TRF2	0.9	1.000	2.56	102,400
1	101	ONE FAM	RA				2.190	AC	7,000.00	1.000	0		0.80	MA	1.00	TOP3		0			1.000	5,600	12,300
						Total Card Land Units	3.11	AC	Parcel Total Land Area:		3.11											Total Land Value	114,700

Property Location 111 CHESTNUT ST | Map ID 29/ 35/ A/ / | Bldg Name | State Use 101
Vision ID 2260 | Account # 2300 | Bldg # 1 | Sec # 1 of 1 | Card # 1 of 1 | Print Date 12/12/2022 4:35:35 P

CONSTRUCTION DETAIL

Element	Cd	Description
Style	19	RANCH
Model	01	RESIDENTIAL
Grade	C	AVERAGE
Stories	1.00	1 STORY
Foundation	1	CONCRETE
Exterior Wall 1	3	ALUMINUM
Exterior Wall 2		
Roof Structure	1	GABLE
Roof Cover	1	ASPHALT SH
Interior Wall 1	1	DRYWALL
Interior Wall 2		
Interior Floor 1	4	CARPET
Interior Floor 2		
Heat Fuel	2	GAS
Heat Type	1	FORCED H/A
AC Type	01	NONE
Bedrooms	3	
Full Baths	2	
Half Baths	1	
Extra Fixtures	1	
Total Rooms	6	
Bath Style	A	AVERAGE
Half Bath Style	A	AVERAGE
Kitchens	1	
Kitchen Style	A	AVERAGE
Extra Kitchens	0	
Extra Kitchen St		
FBM Sqft	1095	
FBM Quality	3	
Fireplaces	1	
WS Flues	1	
Central Vac	1	YES
Frame	1	WOOD

CONSTRUCTION DETAIL (CONTINUED)

Element	Cd	Description
Basement Floor	12	CONCRETE
Bsmt Garage		
#Heat Sys	1.00	
Units	1	

MIXED USE

Code	Description	Percentage
101	ONE FAM	100
		0
		0

COST / MARKET VALUATION

Adj Base Rate	112.95
RCN	278,514
Net Other Adj	
Year Built	1977
Effective Year Built	1995
Depreciation Code	GD
Remodel Rating	
Year Remodeled	
Depreciation %	26
Functional Obsol	
External Obsol	
Cost Trend Factor	1
Condition	
% Complete	
Overall % Condition	74
RCNLD	206,100
Dep % Ovr	
Dep Ovr Comment	
Misc Imp Ovr	
Misc Imp Ovr Comment	
Cost to Cure Ovr	
Cost to Cure Ovr Comment	

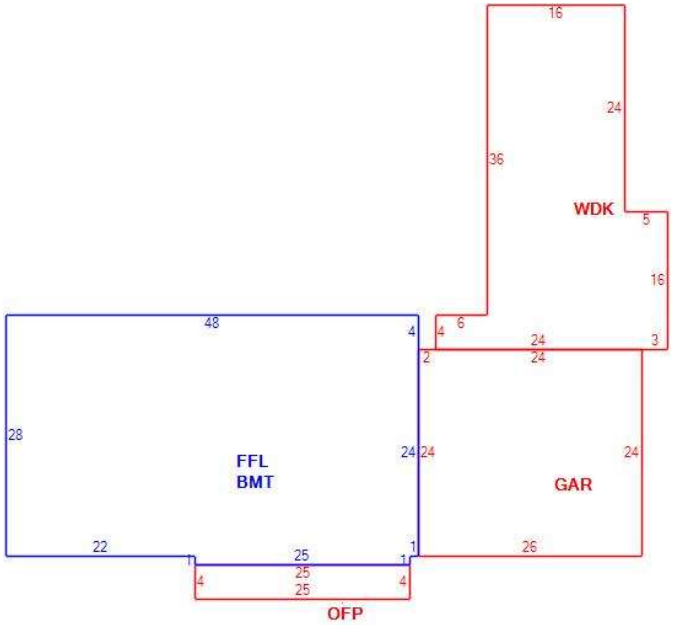

OB - OUTBUILDING & YARD ITEMS(L) / XF - BUILDING EXTRA FEATURES(B)

Code	Description	Su	Sub Type	Lan	Units	Unit Price	Yr Blt	%	Dep.	Cond	Gra	Qual	Apprais Va
02	SHED/FR			L	240	7.48	2010	60	0.00	AV	A	1.00	1,100

BUILDING SUB-AREA SUMMARY SECTION

Subarea	Description	Living	Gross	Eff Area	Unit Cost	Undeprec Value
BMT	BASEMENT	0	1,369		27.17	37,189
FFL	1ST FLOOR	1,369	1,369		135.73	185,812
GAR	GARAGE	0	624		54.38	33,932
OFP	OPEN PORCH	0	100		13.57	1,357
WDK	WOOD DECK	0	744		27.18	20,223
	Ttl Gross Liv / Lease Area	1,369	4,206			278,514