Property Location 250 NORTH MAIN ST | Map ID 14/ 10/ 0/ / | Bldg Name | State Use 342
Vision ID 236 | Account # 242 | Bldg # 1 | Sec # 1 of 1 | Card # 1 of 1 | Print Date 12/12/2022 11:50:12

CURRENT OWNER	TOPO	UTILITIES	STRT / ROAD	LOCATION
CGN HOLDINGS LLC		1 TYPCL		

1051 CONVERSE ST

LONGMEADOW MA 01106

SUPPLEMENTAL DATA

Alt Prcl ID	Received
SP Permit	NIA
Chapter La	Field 8
OC Dates	Field 9
In+Ex FY	Field 10
Mailed	
GIS ID F_379031_2853533	Assoc Pid#

CURRENT ASSESSMENT

Description	Code	Appraised	Assessed
COMMERC.	342	2,260,100	2,260,100
COMM LAND	342	511,300	511,300
COMMERC.	342	40,900	40,900
Total		2,812,300	2,812,300

1006

EAST LONGMEADOW, MA

VISION

RECORD OF OWNERSHIP

	BK-VOL/PAGE		SALE DATE	Q/U	V/I	SALE PRICE	VC
CGN HOLDINGS LLC	21841	0267	08-31-2017	U	V	450,000	1B
KJTS LLC	20682	0220	04-29-2015	Q	V	450,000	00
DOUGAN CAROL	19613	0333	12-27-2012	Q	V	300,000	00
RICHARD CHARLES H,	07073	0587	01-17-1989	U	I	440,000	
CSB DEVELOPMENT CORP	07073	0585	01-17-1989	U	I	220,000	1B

PREVIOUS ASSESSMENTS (HISTORY)

Year	Code	Assessed	Year	Code	Assessed	Year	Code	Assessed
2022	342	2,104,300	2021	342	2,016,800	2020	342	1,857,100
	342	456,700		342	456,700		342	445,200
	342	40,900		342	40,900		342	40,900
							356	11,500
	Total	2,601,900		Total	2,514,400		Total	2,354,700

EXEMPTIONS

Year	Code	Description	Amount
		Total	0.00

OTHER ASSESSMENTS

Code	Description	Number	Amount	Comm Int

This signature acknowledges a visit by a Data Collector or Assessor

ASSESSING NEIGHBORHOOD

Nbhd	Nbhd Name	B	Tracing	Batch
0001			390	BG

NOTES

PEDIATRIC SERVICES OF SPFLD & ASCENT

DENTAL SOLUTIONS, EAST POINTE FOOT ANKLE

APPRAISED VALUE SUMMARY

Appraised Bldg. Value (Card)	2,111,600
Appraised Xf (B) Value (Bldg)	148,500
Appraised Ob (B) Value (Bldg)	40,900
Appraised Land Value (Bldg)	511,300
Special Land Value	0
Total Appraised Parcel Value	2,812,300
Valuation Method	C
Total Appraised Parcel Value	2,812,300

BUILDING PERMIT RECORD

Permit Id	Issue Date	Type	Description	Amount	Insp Date	% Comp	Date Comp	Comments
202100678	03-03-2021	9	ALTERATION	283,770	06-23-2022	100	06-23-2022	FIT UP UNOCCUPIED SPACE
202002043	07-07-2020	6	SIGN	1,000	07-13-2021	100	07-13-2021	40 SQ FT ON EXISTING SIGN
202001383	07-02-2020	MN	Manual Note	3,000		0		MODIFY EXISTING FIRE ALA
202001383	04-28-2020	9	ALTERATION	181,750	06-30-2020	100		ALTERATION OF APPROX 23
201802405	07-20-2018	9	ALTERATION	28,500	06-30-2020	90		INTERIOR BUILD-OUT
201800360	02-01-2018	9	ALTERATION	242,000	06-19-2018	100	06-19-2018	INT BUILD-OUT FOR ASCEN
201800249	01-26-2018	MN	Manual Note	42,100	06-19-2018	100	06-19-2018	SPRINKLER SYSTEM

VISIT / CHANGE HISTORY

Date	Id	Type	Is	Cd	Purpose/Result
06-23-2022	334			15	PERMIT VISIT
04-20-2021	333			14	INSPECTED
06-30-2020	334			15	PERMIT VISIT
05-22-2019	334			15	PERMIT VISIT
06-19-2018	333			15	PERMIT VISIT
06-21-2017	317			15	PERMIT VISIT
06-19-1980	500			3	MEAS+INSPCTD

LAND LINE VALUATION SECTION

B	Use Code	Description	Zone	Land Type	Land Units		Unit Price	I. Factor	Site Index	Cond.	Nbhd.	Nhbd Adj	Notes	Location Adjustment		Adj Unit Pric	Land Value
1	342	PROF OF	CO	SITE	87,120	SF	3.35	1.71000	E	1.00	BG	1.000			0	5.73	499,200
1	342	PROF OF	CO	EXCESS	0.230	AC	52,500.00	1.00000	0	1.00	BG	1.000			0	52,500	12,100
				Total Card Land Units	2.23	AC	Parcel Total Land Area:			2.23						Total Land Value	511,300

Property Location 250 NORTH MAIN ST | Map ID 14/ 10/ 0/ / | Bldg Name | State Use 342
Vision ID 236 | Account # 242 | Bldg # 1 | Sec # 1 of 1 | Card # 1 of 1 | Print Date 12/12/2022 11:50:14

CONSTRUCTION DETAIL

Element	Cd	Description
Style:	72	OFFICE-PRO
Model	94	COMMERCIAL
Grade	A	VERY GOOD
Stories	2.00	2 STORY
Occupancy	4.00	
Exterior Wall 1	8	BRICK VENR
Exterior Wall 2		
Roof Structure	4	FLAT
Roof Cover	11	MEMBRANE
Interior Wall 1	1	DRYWALL
Interior Wall 2		
Interior Floor 1	4	CARPET
Interior Floor 2		
Heating Fuel	2	GAS
Heating Type	1	FORCED H/A
AC Percent	100	
FBM Sqft		
Bldg Use	342	PROF OF
Total Rooms		
Bedrooms		
Full Baths	1	
Half Baths	6	
Extra Fixtures	5	
#Heat Sys	4	
Frame	2	STEEL
Bath Style	A	AVERAGE
Foundation	1	CONCRETE
Partitions	T	TYPICAL
Wall Height	14.00	
FBM Quality		
Overhead Door		
Kitchens		

CONSTRUCTION DETAIL (CONTINUED)

Element	Cd	Description

MIXED USE

Code	Description	Percentage
342	PROF OF	100
		0
		0

COST / MARKET VALUATION

RCN	2,132,956
Year Built	2017
Effective Year Built	2020
Depreciation Code	EX
Remodel Rating	
Year Remodeled	
Depreciation %	1
Functional Obsol	
External Obsol	
Trend Factor	1
Condition	
Condition %	
Percent Good	99
Cns Sect Rcnld	2,111,600
Dep % Ovr	
Dep Ovr Comment	
Misc Imp Ovr	
Misc Imp Ovr Comment	
Cost to Cure Ovr	
Cost to Cure Ovr Comment	

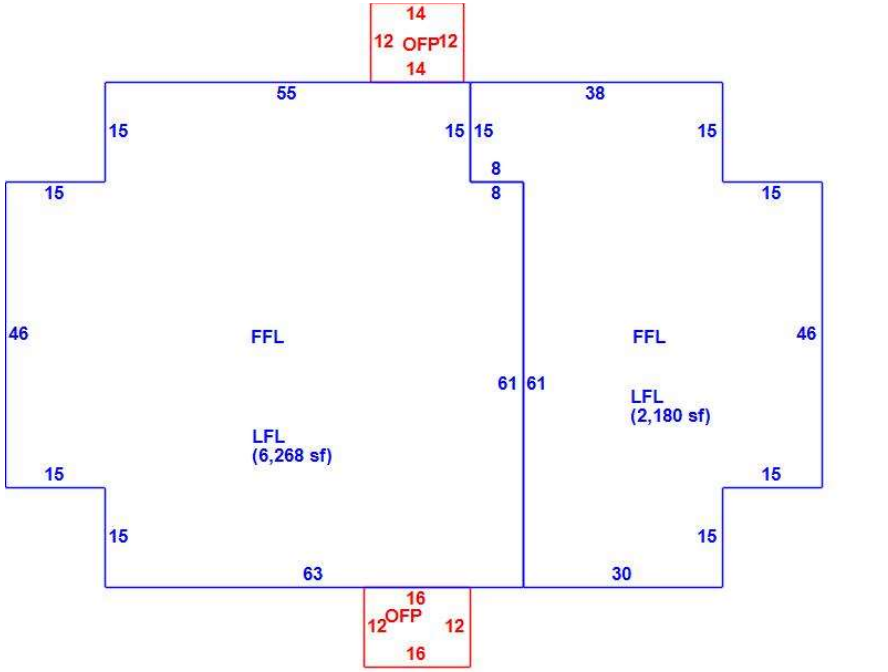

OB - OUTBUILDING & YARD ITEMS(L) / XF - BUILDING EXTRA FEATURES(B)

Code	Description	L/B	Units	Unit Price	Yr Blt	Cond. Cd	% Good	Grade	Grade Adj	Appr. Value
85	PAVING	L	20,000	1.61	2018	AV	55	A	1.00	17,700
77	LITE-SIN	L	8	690.00	2018	AV	55	A	1.00	3,000
78	LITE-DBL	L	40	920.00	2018	AV	55	A	1.00	20,200
SPR	SPRINKLER	L	1	1.00	2018	AV	55	A	1.00	0
61	ELEV-COMME	B	2	75000.00	2018	AV	99	A	0.00	148,500
GEN	GENERATOR	B		0.00	2019	AV	99	A	1.00	0

BUILDING SUB-AREA SUMMARY SECTION

Code	Description	Living Area	Floor Area	Eff Area	Unit Cost	Undeprec Value
FFL	1ST FLOOR	8,448	8,448		136.16	1,150,285
LFL	LOWER FLR	8,448	8,448		115.74	977,769
OFP	OPEN PORCH	0	360		13.62	4,902
	Ttl Gross Liv / Lease Area	16,896	17,256			2,132,956