Property Location 340 PROSPECT ST | Map ID 30/ 27A/ 1A/ / | Bldg Name | State Use 101
Vision ID 2682 | Account # 2728 | Bldg # 1 | Sec # 1 of 1 | Card # 1 of 1 | Print Date 12/12/2022 5:35:30 P

CURRENT OWNER	TOPO TYPE	UTILITY	STREET	LOCATION
MICHAELSON JULIE A				
SHARPY DEAN	TOPO WET	EASEMENT	TRAFFIC	CORNER
340 PROSPECT ST	DRAINAGE		VIEW	COMMUNITY
EAST LONGMEADOW MA 01028				

GIS ID F_382685_2844749

SUPPLEMENTAL DATA

Alt Prcl ID		Received	
SP Permit		NIA	
Chapter Land		Field 8	
OC Dates	8/27/2018	Field 9	
In+Ex FY		Field 10	
Mailed		Assoc Pid#	

CURRENT ASSESSMENT

Description	Code	Appraised	Assessed
RESIDNTL.	101	474600	474,600
RES LAND	101	122800	122,800
RESIDNTL.	101	13000	13,000
Total		610,400	610,400

1006
EAST LONGMEADOW

RECORD OF OWNERSHIP

	BK-VOL/PAGE		SALE DATE	Q/U	V/I	SALE PRICE	VC
MICHAELSON JULIE A	21215	0274	06-10-2016	U	V	77,000	1
SAMSON RITA	19442	0334	09-12-2012	U	V	100	1A
SOLOMITA MARIO ,	07351	0595	12-22-1989	U	V	70,000	
CHRZAN STANLEY	05833	0474	06-14-1985	U	I	1	
BAYBANK	00000	0000		U		0	

PREVIOUS ASSESSMENTS (HISTORY)

Year	Code	Assessed	Year	Code	Assessed	Year	Code	Assessed
2022	101	432,800	2021	101	414,800	2020	101	397,300
	101	110,400		101	102,400		101	102,400
	101	13,000		101	13,000		101	10,400
	Total	556,200		Total	530,200		Total	510,100

EXEMPTIONS

Year	Code	Description	Amount
		Total	0.00

OTHER ASSESSMENTS

Code	Description	YEAR	Amount	Comm Int

This signature acknowledges a visit by a Data Collector or Assessor

APPRAISED VALUE SUMMARY

Appraised BLDG. Value (Card)	474,600
Appraised Xf (B) Value (Bldg)	0
Appraised Ob (B) Value (Bldg)	13,000
Appraised Land Value (Bldg)	122,800
Special Land Value	0
Total Appraised Parcel Value	610,400
Valuation Method	C
Adjustment	
Net Total Appraised Parcel Value	610,400

ASSESSING NEIGHBORHOOD

Nbhd	Nbhd Name		Tracing	Batch
0001			101	MG

NOTES

SUB DIV #571 +645

BUILDING PERMIT RECORD

Permit Id	Issue Date	Type	Description	Amount	Insp Date	% Comp	Date Comp	Comments
201702151	07-21-2017	11	POOL	21,000	02-28-2018	100	02-28-2018	L SHAPE INGROUN
201602379	08-19-2016	2	DWELLING	400,000	06-26-2017	90		2910sf RANCH W/W

VISIT / CHANGE HISTORY

Date	Type	Is	Id	Cd	Purpose/Result
07-31-2018			400	14	INSPECTED
02-28-2018			333	15	PERMIT VISIT
06-26-2017			317	15	PERMIT VISIT
05-04-2017			317	3	MEAS+INSPCTD

LAND LINE VALUATION SECTION

B	Use Co	Description	Zone	D	Fronta	Depth	Land Units		Unit Price	I. Fact	S.A.	Ac Di	C. Fact	St. Idx	Adj	Notes	Special Pricing				Size A	Adj Unit Pric	Land Value
1	101	ONE FAM	RAA				40,000	SF	2.84	1.200	7	LAND	1.00	MG	1.00			0	TRF1	0.9	1.000	3.07	122,800
1	101	ONE FAM	RAA				0.000	AC	7,000.00	1.000	0		1.00	MG	1.00			0			1.000	7,000	0
						Total Card Land Units	0.92	AC	Parcel Total Land Area:	0.92												Total Land Value	122,800

Property Location 340 PROSPECT ST | Map ID 30/ 27A/ 1A/ / | Bldg Name | State Use 101
Vision ID 2682 | Account # 2728 | Bldg # 1 | Sec # 1 of 1 | Card # 1 of 1 | Print Date 12/12/2022 5:35:30 P

CONSTRUCTION DETAIL

Element	Cd	Description
Style	19	RANCH
Model	01	RESIDENTIAL
Grade	B+	GOOD (+)
Stories	1.00	1 STORY
Foundation	1	CONCRETE
Exterior Wall 1	4	VINYL
Exterior Wall 2	16	STONE VENR
Roof Structure	2	HIP
Roof Cover	1	ASPHALT SH
Interior Wall 1	1	DRYWALL
Interior Wall 2		
Interior Floor 1	3	HARDWOOD
Interior Floor 2		
Heat Fuel	2	GAS
Heat Type	1	FORCED H/A
AC Type	03	FULL
Bedrooms	3	
Full Baths	2	
Half Baths	1	
Extra Fixtures	3	
Total Rooms	7	
Bath Style	G	GOOD
Half Bath Style	G	GOOD
Kitchens	1	
Kitchen Style	G	GOOD
Extra Kitchens		
Extra Kitchen St		
FBM Sqft		
FBM Quality		
Fireplaces	1	
WS Flues		
Central Vac		
Frame	1	WOOD

CONSTRUCTION DETAIL (CONTINUED)

Element	Cd	Description
Basement Floor	12	CONCRETE
Bsmt Garage	2	
#Heat Sys	1.00	
Units	1	

MIXED USE

Code	Description	Percentage
101	ONE FAM	100
		0
		0

COST / MARKET VALUATION

Adj Base Rate	87.19
RCN	489,229
Net Other Adj	
Year Built	2016
Effective Year Built	2018
Depreciation Code	GD
Remodel Rating	
Year Remodeled	
Depreciation %	3
Functional Obsol	
External Obsol	
Cost Trend Factor	1
Condition	
% Complete	
Overall % Condition	97
RCNLD	474,600
Dep % Ovr	
Dep Ovr Comment	
Misc Imp Ovr	
Misc Imp Ovr Comment	
Cost to Cure Ovr	
Cost to Cure Ovr Comment	

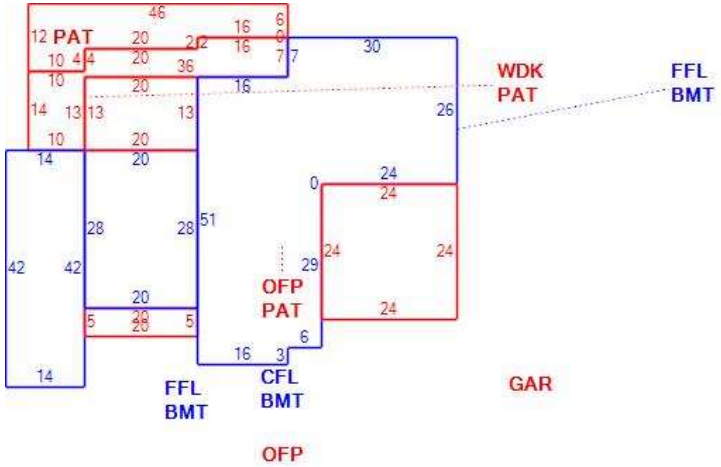

OB - OUTBUILDING & YARD ITEMS(L) / XF - BUILDING EXTRA FEATURES(B)

Code	Description	Su	Sub Type	Lan	Units	Unit Price	Yr Blt	%	Dep.	Cond	Gra	Qual	Apprais Va
11	POOL I-V	OB	Outbuildi	L	512	29.00	2017	70	0.00	GD	G	1.25	13,000

BUILDING SUB-AREA SUMMARY SECTION

Subarea	Description	Living	Gross	Eff Area	Unit Cost	Undeprec Value
BMT	BASEMENT	0	2,918		25.08	73,184
CFL	CATHEDRAL CE	560	560		129.12	72,307
FFL	1ST FLOOR	2,358	2,358		125.31	295,492
GAR	GARAGE	0	576		50.04	28,822
OFP	OPEN PORCH	0	360		12.53	4,511
PAT	PATIO	0	988		6.22	6,140
WDK	WOOD DECK	0	352		24.92	8,772
	Ttl Gross Liv / Lease Area	2,918	8,112			489,229