Property Location 16 AUTUMN RIDGE | Map ID 43/ 45/ 9/ / | Bldg Name | State Use 101
Vision ID 3622 | Account # 3681 | Bldg # 1 | Sec # 1 of 1 | Card # 1 of 1 | Print Date 12/12/2022 7:56:46 P

CURRENT OWNER	TOPO TYPE	UTILITY	STREET	LOCATION
OROURKE JOHN E III				
OROURKE ANNA F	TOPO WET	EASEMENT	TRAFFIC	CORNER
16 AUTUMN RIDGE				
	DRAINAGE		VIEW	COMMUNITY
EAST LONGMEADOW MA 01028				

GIS ID F_384287_2841713

SUPPLEMENTAL DATA

Alt Prcl ID	Received
SP Permit	NIA
Chapter Land	Field 8
OC Dates	Field 9
In+Ex FY	Field 10
Mailed	Assoc Pid#

CURRENT ASSESSMENT

Description	Code	Appraised	Assessed
RESIDNTL.	101	419400	419,400
RES LAND	101	143800	143,800
	Total	563,200	563,200

1006

EAST LONGMEADOW

RECORD OF OWNERSHIP

RECORD OF OWNERSHIP	BK-VOL/PAGE		SALE DATE	Q/U	V/I	SALE PRICE	VC
OROURKE JOHN E III	18913	0523	09-14-2011	U	I	0	1F
O ROURKE JOHN E III,	15948	0155	06-01-2006	U	I	535,900	
ORBAN,ALEX J &	10439	0070	09-09-1998	U	I	305,838	
CHAPDELAINE JOS & SONS INC	03419	0269	05-05-1969	U	V	0	
CHAPDELAINE JOSEPH + SONS	00000	0000		U		0	

PREVIOUS ASSESSMENTS (HISTORY)

Year	Code	Assessed	Year	Code	Assessed	Year	Code	Assessed
2022	101	381,800	2021	101	366,700	2020	101	352,500
	101	146,200		101	135,800		101	135,800
	Total	528,000		Total	502,500		Total	488,300

EXEMPTIONS

Year	Code	Description	Amount
		Total	0.00

OTHER ASSESSMENTS

Code	Description	YEAR	Amount	Comm Int

This signature acknowledges a visit by a Data Collector or Assessor

ASSESSING NEIGHBORHOOD

Nbhd	Nbhd Name		Tracing	Batch
0001			101	NV

NOTES

SUB DIV #777

APPRAISED VALUE SUMMARY

Appraised BLDG. Value (Card)	419,400
Appraised Xf (B) Value (Bldg)	0
Appraised Ob (B) Value (Bldg)	0
Appraised Land Value (Bldg)	143,800
Special Land Value	0
Total Appraised Parcel Value	563,200
Valuation Method	C
Adjustment	
Net Total Appraised Parcel Value	563,200

BUILDING PERMIT RECORD

Permit Id	Issue Date	Type	Description	Amount	Insp Date	% Comp	Date Comp	Comments
101	05-13-2003	7	REMODEL	25,000				
105	06-03-1998	1	PORCH	6,000				
23	02-23-1998	2	DWELLING	218,000				

VISIT / CHANGE HISTORY

Date	Type	Is	Id	Cd	Purpose/Result
04-17-2018			333	2	MEASURED
02-08-2008			317	3	MEAS+INSPCTD
02-02-2004			311	15	PERMIT VISIT
10-10-2002			274	14	INSPECTED
10-08-2002			250	22	MAILER SENT
09-24-2002			274	2	MEASURED
12-07-1998			105	2	MEASURED

LAND LINE VALUATION SECTION

B	Use Co	Description	Zone	D	Fronta	Depth	Land Units		Unit Price	I. Fact	S.A.	Ac Di	C. Fact	St. Idx	Adj	Notes	Special Pricing				Size A	Adj Unit Pric	Land Value
1	101	ONE FAM	RAA				40,000	SF	2.84	1.250	9	LAND	1.00	NV	1.00			0			1.000	3.55	142,000
1	101	ONE FAM	RAA				0.250	AC	7,000.00	1.000	0		1.00	NV	1.00			0			1.000	7,000	1,800
						Total Card Land Units	1.17	AC	Parcel Total Land Area:	1.17												Total Land Value	143,800

Property Location 16 AUTUMN RIDGE | Map ID 43/ 45/ 9/ / | Bldg Name | State Use 101
Vision ID 3622 | Account # 3681 | Bldg # 1 | Sec # 1 of 1 | Card # 1 of 1 | Print Date 12/12/2022 7:56:46 P

CONSTRUCTION DETAIL

Element	Cd	Description
Style	05	CAPE
Model	01	RESIDENTIAL
Grade	B	GOOD
Stories	1.75	1 3/4 STORIES
Foundation	1	CONCRETE
Exterior Wall 1	4	VINYL
Exterior Wall 2		
Roof Structure	1	GABLE
Roof Cover	1	ASPHALT SH
Interior Wall 1	1	DRYWALL
Interior Wall 2		
Interior Floor 1	4	CARPET
Interior Floor 2	3	HARDWOOD
Heat Fuel	2	GAS
Heat Type	1	FORCED H/A
AC Type	03	FULL
Bedrooms	4	
Full Baths	3	
Half Baths	1	
Extra Fixtures	1	
Total Rooms	8	
Bath Style	G	GOOD
Half Bath Style	A	AVERAGE
Kitchens	1	
Kitchen Style	G	GOOD
Extra Kitchens	0	
Extra Kitchen St		
FBM Sqft	1042	
FBM Quality	5	
Fireplaces	1	
WS Flues		
Central Vac	0	NO
Frame	1	WOOD

CONSTRUCTION DETAIL (CONTINUED)

Element	Cd	Description
Basement Floor	12	CONCRETE
Bsmt Garage		
#Heat Sys	1.00	
Units	1	

MIXED USE

Code	Description	Percentage
101	ONE FAM	100
		0
		0

COST / MARKET VALUATION

Adj Base Rate	92.25
RCN	487,622
Net Other Adj	
Year Built	1998
Effective Year Built	2007
Depreciation Code	GD
Remodel Rating	
Year Remodeled	
Depreciation %	14
Functional Obsol	
External Obsol	
Cost Trend Factor	1
Condition	
% Complete	
Overall % Condition	86
RCNLD	419,400
Dep % Ovr	
Dep Ovr Comment	
Misc Imp Ovr	
Misc Imp Ovr Comment	
Cost to Cure Ovr	
Cost to Cure Ovr Comment	

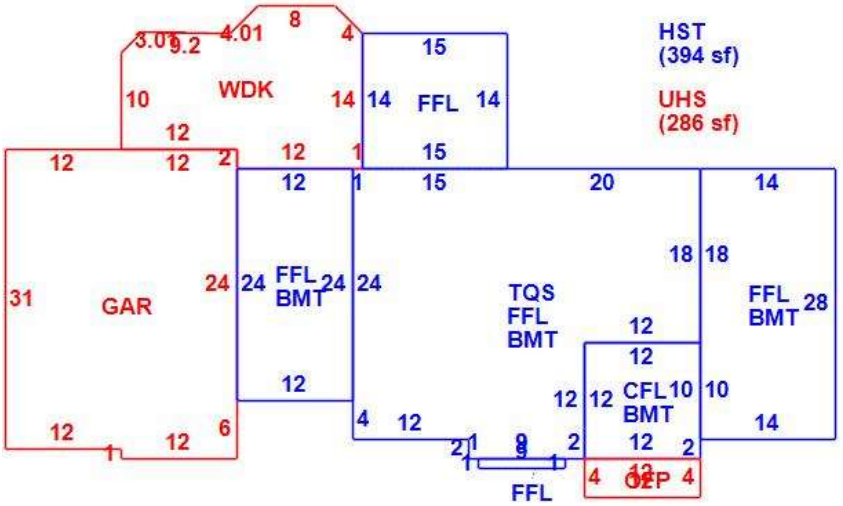

OB - OUTBUILDING & YARD ITEMS(L) / XF - BUILDING EXTRA FEATURES(B)

Code	Description	Su	Sub Type	Lan	Units	Unit Price	Yr Blt	%	Dep.	Cond	Gra	Qual	Apprais Va

BUILDING SUB-AREA SUMMARY SECTION

Subarea	Description	Living	Gross	Eff Area	Unit Cost	Undeprec Value
BMT	BASEMENT	0	1,736		26.70	46,345
CFL	CATHEDRAL CE	144	144		137.27	19,767
FFL	1ST FLOOR	1,811	1,811		133.56	241,874
GAR	GARAGE	0	756		53.35	40,335
HST	HALF STORY	197	394		66.78	26,311
OFP	OPEN PORCH	0	48		13.91	668
TQS	3/4 STORY	684	912		100.17	91,354
UHS	UNFIN HALF STORY	0	286		40.16	11,486
WDK	WOOD DECK	0	355		26.71	9,483
	Ttl Gross Liv / Lease Area	2,836	6,442			487,622