Property Location 15 SOUTH MEADOW RD | Map ID 54/ 15/ 6/ / | Bldg Name | State Use 101
Vision ID 4267 | Account # 4336 | Bldg # 1 | Sec # 1 of 1 | Card # 1 of 1 | Print Date 12/12/2022 9:32:11 P

CURRENT OWNER	TOPO TYPE	UTILITY	STREET	LOCATION
BRENNAN GARY E				
BRENNAN NOREEN B	TOPO WET	EASEMENT	TRAFFIC	CORNER
15 SOUTH MEADOW RD	DRAINAGE		VIEW	COMMUNITY
EAST LONGMEADOW MA 01028				

SUPPLEMENTAL DATA

Alt Prcl ID	Received
SP Permit	NIA
Chapter Land	Field 8
OC Dates	Field 9
In+Ex FY	Field 10
Mailed	Assoc Pid#

GIS ID F_387870_2843332

CURRENT ASSESSMENT

Description	Code	Appraised	Assessed
RESIDNTL.	101	253200	253,200
RES LAND	101	140100	140,100
RESIDNTL.	101	800	800
Total		394,100	394,100

1006

EAST LONGMEADOW

RECORD OF OWNERSHIP

	BK-VOL/PAGE		SALE DATE	Q/U	V/I	SALE PRICE	VC
BRENNAN GARY E	05857	0574	07-23-1985	U	I	28,900	

PREVIOUS ASSESSMENTS (HISTORY)

Year	Code	Assessed	Year	Code	Assessed	Year	Code	Assessed
2022	101	224,600	2021	101	215,000	2020	101	208,700
	101	126,300		101	117,100		101	117,100
	101	800		101	800		101	800
	Total	351,700		Total	332,900		Total	326,600

EXEMPTIONS

Year	Code	Description	Amount
		Total	0.00

OTHER ASSESSMENTS

Code	Description	YEAR	Amount	Comm Int

This signature acknowledges a visit by a Data Collector or Assessor

ASSESSING NEIGHBORHOOD

Nbhd	Nbhd Name		Tracing	Batch
0001			101	NG

NOTES

APPRAISED VALUE SUMMARY

Appraised BLDG. Value (Card)	253,200
Appraised Xf (B) Value (Bldg)	0
Appraised Ob (B) Value (Bldg)	800
Appraised Land Value (Bldg)	140,100
Special Land Value	0
Total Appraised Parcel Value	394,100
Valuation Method	C
Adjustment	
Net Total Appraised Parcel Value	394,100

BUILDING PERMIT RECORD

Permit Id	Issue Date	Type	Description	Amount	Insp Date	% Comp	Date Comp	Comments
202102643	08-20-2021	12	REROOF	39,833	06-13-2022	100	03-01-2022	
201902949	10-01-2019	9	ALTERATION	37,500	05-22-2020	100	12-06-2019	GARAGE COLUMN

VISIT / CHANGE HISTORY

Date	Type	Is	Id	Cd	Purpose/Result
05-22-2020			400	15	PERMIT VISIT
07-03-2018			333	3	MEAS+INSPCTD
03-20-2009			317	2	MEASURED
05-23-2002			105	14	INSPECTED
04-19-2002			250	22	MAILER SENT
04-11-2002			274	2	MEASURED
08-04-1992			131	14	INSPECTED

LAND LINE VALUATION SECTION

B	Use Co	Description	Zone	D	Fronta	Depth	Land Units		Unit Price	I. Fact	S.A.	Ac Di	C. Fact	St. Idx	Adj	Notes	Special Pricing				Size A	Adj Unit Pric	Land Value
1	101	ONE FAM	RA				36,489	SF	3.07	1.250	8	LAND	1.00	NG	1.00			0			1.000	3.84	140,100
Total Card Land Units							0.84	AC	Parcel Total Land Area:			0.84										Total Land Value	140,100

Property Location 15 SOUTH MEADOW RD | Map ID 54/ 15/ 6/ / | Bldg Name | State Use 101
Vision ID 4267 | Account # 4336 | Bldg # 1 | Sec # 1 of 1 | Card # 1 of 1 | Print Date 12/12/2022 9:32:12 P

CONSTRUCTION DETAIL

Element	Cd	Description
Style	05	CAPE
Model	01	RESIDENTIAL
Grade	C+	AVG. (+)
Stories	1.75	1 3/4 STORIES
Foundation	1	CONCRETE
Exterior Wall 1	2	CLAPBOARD
Exterior Wall 2	8	BRICK VENR
Roof Structure	1	GABLE
Roof Cover	1	ASPHALT SH
Interior Wall 1	1	DRYWALL
Interior Wall 2		
Interior Floor 1	3	HARDWOOD
Interior Floor 2		
Heat Fuel	2	GAS
Heat Type	1	FORCED H/A
AC Type	03	FULL
Bedrooms	3	
Full Baths	2	
Half Baths	0	
Extra Fixtures	0	
Total Rooms	6	
Bath Style	A	AVERAGE
Half Bath Style		
Kitchens	1	
Kitchen Style	A	AVERAGE
Extra Kitchens	0	
Extra Kitchen St		
FBM Sqft		
FBM Quality		
Fireplaces	1	
WS Flues		
Central Vac	0	NO
Frame	1	WOOD

CONSTRUCTION DETAIL (CONTINUED)

Element	Cd	Description
Basement Floor	12	CONCRETE
Bsmt Garage		
#Heat Sys	1.00	
Units	1	

MIXED USE

Code	Description	Percentage
101	ONE FAM	100
		0
		0

COST / MARKET VALUATION

Adj Base Rate	106.42
RCN	320,461
Net Other Adj	
Year Built	1985
Effective Year Built	2000
Depreciation Code	GD
Remodel Rating	
Year Remodeled	
Depreciation %	21
Functional Obsol	
External Obsol	
Cost Trend Factor	1
Condition	
% Complete	
Overall % Condition	79
RCNLD	253,200
Dep % Ovr	
Dep Ovr Comment	
Misc Imp Ovr	
Misc Imp Ovr Comment	
Cost to Cure Ovr	
Cost to Cure Ovr Comment	

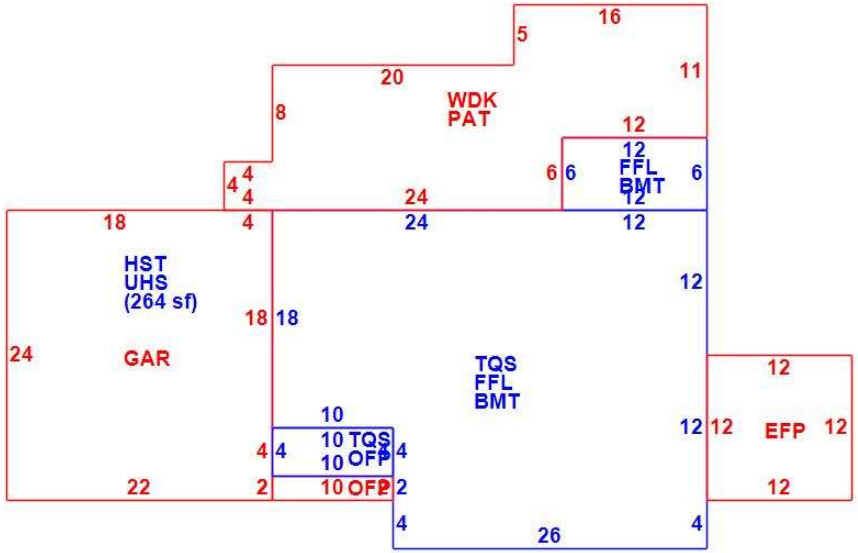

OB - OUTBUILDING & YARD ITEMS(L) / XF - BUILDING EXTRA FEATURES(B)

Code	Description	Su	Sub Type	Lan	Units	Unit Price	Yr Blt	%	Dep.	Cond	Gra	Qual	Apprais Va
02	SHED/FR			L	168	7.48	2014	60	0.00	AV	A	1.00	800

BUILDING SUB-AREA SUMMARY SECTION

Subarea	Description	Living	Gross	Eff Area	Unit Cost	Undeprec Value
BMT	BASEMENT	0	980		25.63	25,114
EFP	ENCL PORCH	0	144		64.07	9,226
FFL	1ST FLOOR	980	980		128.13	125,570
GAR	GARAGE	0	528		51.20	27,036
HST	HALF STORY	132	264		64.07	16,914
OFP	OPEN PORCH	0	60		12.81	769
PAT	PATIO	0	456		6.46	2,947
TQS	3/4 STORY	711	948		96.10	91,103
UHS	UNFIN HALF STORY	0	264		38.34	10,123
WDK	WOOD DECK	0	456		25.57	11,660
	Ttl Gross Liv / Lease Area	1,823	5,080			320,461