Property Location 31 GREENWICH RD | Map ID 59/ 40/ 11/ / | Bldg Name | State Use 101
Vision ID 4470 | Account # 4543 | Bldg # 1 | Sec # 1 of 1 | Card # 1 of 1 | Print Date 12/12/2022 10:03:09

CURRENT OWNER	TOPO TYPE	UTILITY	STREET	LOCATION
RACCO ANTHONY C				
	TOPO WET	EASEMENT	TRAFFIC	CORNER
31 GREENWICH RD				
	DRAINAGE		VIEW	COMMUNITY
EAST LONGMEADOW MA 01028				

SUPPLEMENTAL DATA

Alt Prcl ID	Received
SP Permit	NIA
Chapter Land	Field 8
OC Dates	Field 9
In+Ex FY	Field 10
Mailed	Assoc Pid#

GIS ID F_388777_2856450

CURRENT ASSESSMENT

Description	Code	Appraised	Assessed
RESIDNTL.	101	217200	217,200
RES LAND	101	133800	133,800
RESIDNTL.	101	1000	1,000
Total		352,000	352,000

1006

EAST LONGMEADOW

RECORD OF OWNERSHIP

	BK-VOL/PAGE		SALE DATE	Q/U	V/I	SALE PRICE	VC
RACCO ANTHONY C	21848	0390	09-07-2017	Q	I	249,000	00
HOPE TODD	18482	0002	09-30-2010	U	I	274,900	
HUPFER JUDITH A,	13880	0292	01-05-2004	U	I	1	1
HUPFER STEPHEN C + JUDITH A,	09601	0276	08-27-1996	U	I	165,500	
NICHOLSON KATHERINE V +	08784	0401	03-29-1994	U	I	1	1A

PREVIOUS ASSESSMENTS (HISTORY)

Year	Code	Assessed	Year	Code	Assessed	Year	Code	Assessed
2022	101	192,800	2021	101	184,600	2020	101	174,800
	101	136,300		101	126,000		101	126,000
	101	1,000		101	1,000		101	1,000
	Total	330,100		Total	311,600		Total	301,800

EXEMPTIONS

Year	Code	Description	Amount
		Total	400.00

OTHER ASSESSMENTS

Code	Description	YEAR	Amount	Comm Int

This signature acknowledges a visit by a Data Collector or Assessor

ASSESSING NEIGHBORHOOD

Nbhd	Nbhd Name		Tracing	Batch
0001			101	NV

NOTES

APPRAISED VALUE SUMMARY

Appraised BLDG. Value (Card)	217,200
Appraised Xf (B) Value (Bldg)	0
Appraised Ob (B) Value (Bldg)	1,000
Appraised Land Value (Bldg)	133,800
Special Land Value	0
Total Appraised Parcel Value	352,000
Valuation Method	C
Adjustment	
Net Total Appraised Parcel Value	352,000

BUILDING PERMIT RECORD

Permit Id	Issue Date	Type	Description	Amount	Insp Date	% Comp	Date Comp	Comments
201802860	10-01-2018	62	SOLAR	41,300	06-03-2019	100	06-03-2019	FRONT

VISIT / CHANGE HISTORY

Date	Type	Is	Id	Cd	Purpose/Result
07-18-2019			334	3	MEAS+INSPCTD
06-04-2019			400	15	PERMIT VISIT
03-11-2011			317	16	FIELDREV CHG
07-24-2008			250	22	MAILER SENT
06-20-2008			317	2	MEASURED
04-04-2002			274	14	INSPECTED
03-22-2002			250	22	MAILER SENT

LAND LINE VALUATION SECTION

B	Use Co	Description	Zone	D	Fronta	Depth	Land Units		Unit Price	I. Fact	S.A.	Ac Di	C. Fact	St. Idx	Adj	Notes	Special Pricing				Size A	Adj Unit Pric	Land Value
1	101	ONE FAM	RA				25,000	SF	4.28	1.250	9	LAND	1.00	NV	1.00			0			1.000	5.35	133,800
							Total Card Land Units		0.57	AC	Parcel Total Land Area:		0.57									Total Land Value	133,800

Property Location 31 GREENWICH RD | Map ID 59/ 40/ 11/ / | Bldg Name | State Use 101
Vision ID 4470 | Account # 4543 | Bldg # 1 | Sec # 1 of 1 | Card # 1 of 1 | Print Date 12/12/2022 10:03:10

CONSTRUCTION DETAIL

Element	Cd	Description
Style	05	CAPE
Model	01	RESIDENTIAL
Grade	C+	AVG. (+)
Stories	1.75	1 3/4 STORIES
Foundation	1	CONCRETE
Exterior Wall 1	4	VINYL
Exterior Wall 2		
Roof Structure	1	GABLE
Roof Cover	1	ASPHALT SH
Interior Wall 1	2	PLASTER
Interior Wall 2		
Interior Floor 1	3	HARDWOOD
Interior Floor 2	5	LINO/VINYL
Heat Fuel	1	OIL
Heat Type	1	FORCED H/A
AC Type	01	NONE
Bedrooms	4	
Full Baths	2	
Half Baths	0	
Extra Fixtures	1	
Total Rooms	8	
Bath Style	G	GOOD
Half Bath Style		
Kitchens	1	
Kitchen Style	G	GOOD
Extra Kitchens	0	
Extra Kitchen St		
FBM Sqft		
FBM Quality		
Fireplaces	1	
WS Flues		
Central Vac	0	NO
Frame	1	WOOD

CONSTRUCTION DETAIL (CONTINUED)

Element	Cd	Description
Basement Floor	12	CONCRETE
Bsmt Garage		
#Heat Sys	1.00	
Units	1	

MIXED USE

Code	Description	Percentage
101	ONE FAM	100
		0
		0

COST / MARKET VALUATION

Adj Base Rate	103.62
RCN	344,761
Net Other Adj	
Year Built	1958
Effective Year Built	1984
Depreciation Code	AG
Remodel Rating	
Year Remodeled	
Depreciation %	37
Functional Obsol	
External Obsol	
Cost Trend Factor	1
Condition	
% Complete	
Overall % Condition	63
RCNLD	217,200
Dep % Ovr	
Dep Ovr Comment	
Misc Imp Ovr	
Misc Imp Ovr Comment	
Cost to Cure Ovr	
Cost to Cure Ovr Comment	

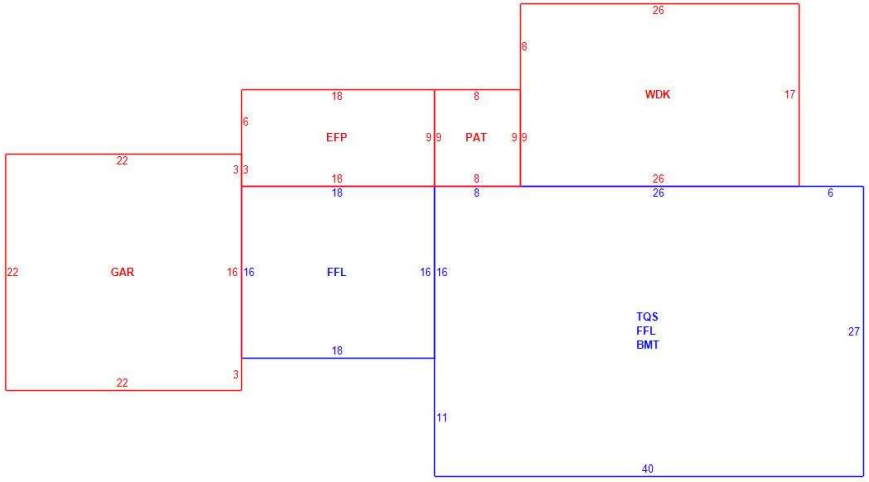

OB - OUTBUILDING & YARD ITEMS(L) / XF - BUILDING EXTRA FEATURES(B)

Code	Description	Su	Sub Type	Lan	Units	Unit Price	Yr Blt	%	Dep.	Cond	Gra	Qual	Apprais Va
07	POOL A-C	OB	Outbuildi	L	24	69.00	2008	60	0.00	AV	A	1.00	1,000
SOL	Solar Panels	EX	Extra Fea	B		0.00	2019	63	1.00			0.00	0

BUILDING SUB-AREA SUMMARY SECTION

Subarea	Description	Living	Gross	Eff Area	Unit Cost	Undeprec Value
BMT	BASEMENT	0	1,080		24.97	26,972
EFP	ENCL PORCH	0	162		62.43	10,114
FFL	1ST FLOOR	1,368	1,368		124.87	170,820
GAR	GARAGE	0	484		50.05	24,224
PAT	PATIO	0	72		6.94	499
TQS	3/4 STORY	810	1,080		93.65	101,143
WDK	WOOD DECK	0	442		24.86	10,988
	Ttl Gross Liv / Lease Area	2,178	4,688			344,761