Property Location 97 BROOKHAVEN DR | Map ID 71/ 38/ 25/ / | Bldg Name | State Use 101
Vision ID 5183 | Account # 5260 | Bldg # 1 | Sec # 1 of 1 | Card # 1 of 1 | Print Date 12-13-2022 8:35:14 A

CURRENT OWNER	TOPO TYPE	UTILITY	STREET	LOCATION
MORIN RAYMOND A				
MORIN JOAN E	TOPO WET	EASEMENT	TRAFFIC	CORNER
97 BROOKHAVEN DR	DRAINAGE		VIEW	COMMUNITY
EAST LONGMEADOW MA 01028				

GIS ID F_391935_2857159

SUPPLEMENTAL DATA

Alt Prcl ID	Received
SP Permit	NIA
Chapter Land	Field 8
OC Dates	Field 9
In+Ex FY	Field 10
Mailed	Assoc Pid#

CURRENT ASSESSMENT

Description	Code	Appraised	Assessed
RESIDNTL.	101	238300	238,300
RES LAND	101	128300	128,300
Total		366,600	366,600

1006

EAST LONGMEADOW

RECORD OF OWNERSHIP

	BK-VOL/PAGE		SALE DATE	Q/U	V/I	SALE PRICE	VC
MORIN RAYMOND A	04093	0318	01-22-1975	U	I	0	

PREVIOUS ASSESSMENTS (HISTORY)

Year	Code	Assessed	Year	Code	Assessed	Year	Code	Assessed
2022	101	213,700	2021	101	204,700	2020	101	196,700
	101	115,800		101	107,000		101	107,000
	Total	329,500		Total	311,700		Total	303,700

EXEMPTIONS

Year	Code	Description	Amount
		Total	0.00

OTHER ASSESSMENTS

Code	Description	YEAR	Amount	Comm Int

This signature acknowledges a visit by a Data Collector or Assessor

ASSESSING NEIGHBORHOOD

Nbhd	Nbhd Name		Tracing	Batch
0001			101	MG

NOTES

APPRAISED VALUE SUMMARY

Appraised BLDG. Value (Card)	238,300
Appraised Xf (B) Value (Bldg)	0
Appraised Ob (B) Value (Bldg)	0
Appraised Land Value (Bldg)	128,300
Special Land Value	0
Total Appraised Parcel Value	366,600
Valuation Method	C
Adjustment	
Net Total Appraised Parcel Value	366,600

BUILDING PERMIT RECORD

Permit Id	Issue Date	Type	Description	Amount	Insp Date	% Comp	Date Comp	Comments
33	02-11-2011	7	REMODEL	70,000				2ND FL, ADD BATH,

VISIT / CHANGE HISTORY

Date	Type	Is	Id	Cd	Purpose/Result
07-03-2019			334	3	MEAS+INSPCTD
02-24-2012			317	15	PERMIT VISIT
10-05-2006			311	14	INSPECTED
09-28-2006			311	2	MEASURED
04-08-2000			247	14	INSPECTED
02-09-2000			247	2	MEASURED
03-14-1992			131	3	MEAS+INSPCTD

LAND LINE VALUATION SECTION

B	Use Co	Description	Zone	D	Fronta	Depth	Land Units		Unit Price	I. Fact	S.A.	Ac Di	C. Fact	St. Idx	Adj	Notes	Special Pricing				Size A	Adj Unit Pric	Land Value
1	101	ONE FAM	RA				25,065	SF	4.27	1.200	7	LAND	1.00	MG	1.00			0			1.000	5.12	128,300
						Total Card Land Units	0.58	AC	Parcel Total Land Area:	0.58												Total Land Value	128,300

Property Location 97 BROOKHAVEN DR | Map ID 71/ 38/ 25/ / | Bldg Name | State Use 101
Vision ID 5183 | Account # 5260 | Bldg # 1 | Sec # 1 of 1 | Card # 1 of 1 | Print Date 12-13-2022 8:35:14 A

CONSTRUCTION DETAIL

Element	Cd	Description
Style	06	COLONIAL
Model	01	RESIDENTIAL
Grade	C+	AVG. (+)
Stories	2.00	2 STORY
Foundation	1	CONCRETE
Exterior Wall 1	4	VINYL
Exterior Wall 2		
Roof Structure	1	GABLE
Roof Cover	1	ASPHALT SH
Interior Wall 1	1	DRYWALL
Interior Wall 2		
Interior Floor 1	3	HARDWOOD
Interior Floor 2	6	CERAMIC TL
Heat Fuel	2	GAS
Heat Type	3	FORCED H/W
AC Type	01	NONE
Bedrooms	4	
Full Baths	2	
Half Baths	1	
Extra Fixtures	1	
Total Rooms	8	
Bath Style	G	GOOD
Half Bath Style	G	GOOD
Kitchens	1	
Kitchen Style	A	AVERAGE
Extra Kitchens	0	
Extra Kitchen St		
FBM Sqft		
FBM Quality		
Fireplaces	1	
WS Flues		
Central Vac	1	YES
Frame	1	WOOD

CONSTRUCTION DETAIL (CONTINUED)

Element	Cd	Description
Basement Floor	12	CONCRETE
Bsmt Garage		
#Heat Sys	1.00	
Units	1	

MIXED USE

Code	Description	Percentage
101	ONE FAM	100
		0
		0

COST / MARKET VALUATION

Adj Base Rate	104.48
RCN	340,469
Net Other Adj	
Year Built	1969
Effective Year Built	1991
Depreciation Code	GD
Remodel Rating	
Year Remodeled	
Depreciation %	30
Functional Obsol	
External Obsol	
Cost Trend Factor	1
Condition	
% Complete	
Overall % Condition	70
RCNLD	238,300
Dep % Ovr	
Dep Ovr Comment	
Misc Imp Ovr	
Misc Imp Ovr Comment	
Cost to Cure Ovr	
Cost to Cure Ovr Comment	

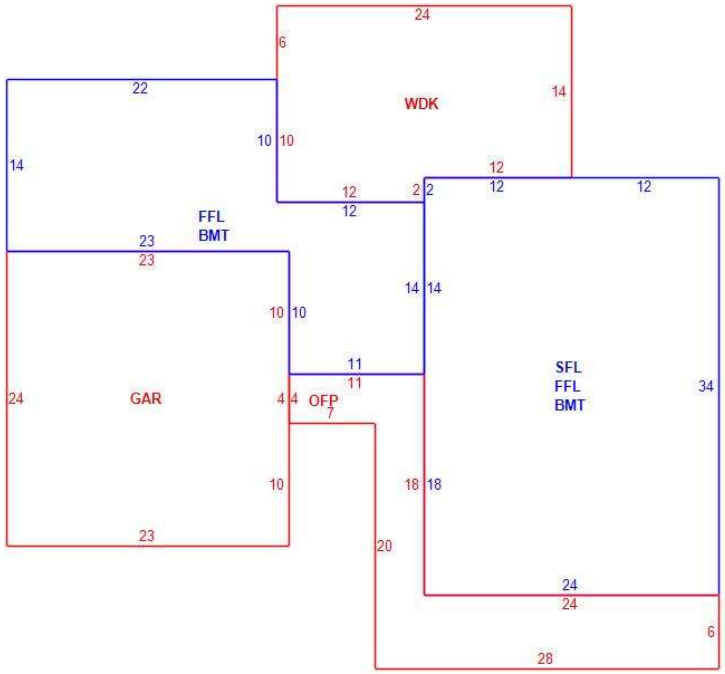

OB - OUTBUILDING & YARD ITEMS(L) / XF - BUILDING EXTRA FEATURES(B)

Code	Description	Su	Sub Type	Lan	Units	Unit Price	Yr Blt	%	Dep.	Cond	Gra	Qual	Apprais Va

BUILDING SUB-AREA SUMMARY SECTION

Subarea	Description	Living	Gross	Eff Area	Unit Cost	Undeprec Value
BMT	BASEMENT	0	1,282		25.43	32,595
FFL	1ST FLOOR	1,282	1,282		127.33	163,232
GAR	GARAGE	0	552		50.98	28,139
OFP	OPEN PORCH	0	268		12.83	3,438
SFL	2ND FLOOR	816	816		127.33	103,898
WDK	WOOD DECK	0	360		25.47	9,167
	Ttl Gross Liv / Lease Area	2,098	4,560			340,469