Property Location 183 BROOKHAVEN DR | Map ID 71/ 50/ 63/ / | Bldg Name | State Use 101
Vision ID 5197 | Account # 5274 | Bldg # 1 | Sec # 1 of 1 | Card # 1 of 1 | Print Date 12-13-2022 8:37:18 A

CURRENT OWNER	TOPO TYPE	UTILITY	STREET	LOCATION
FERRERO WILLIAM DAVID				
FERRERO VANESSA M	**TOPO WET**	**EASEMENT**	**TRAFFIC**	**CORNER**
183 BROOKHAVEN DR				
	DRAINAGE		**VIEW**	**COMMUNITY**
EAST LONGMEADOW MA 01028				

SUPPLEMENTAL DATA

Alt Prcl ID	Received
SP Permit	NIA
Chapter Land	Field 8
OC Dates	Field 9
In+Ex FY	Field 10
Mailed	Assoc Pid#

GIS ID F_390780_2856665

CURRENT ASSESSMENT

Description	Code	Appraised	Assessed
RESIDNTL.	101	223600	223,600
RES LAND	101	145800	145,800
RESIDNTL.	101	38900	38,900
Total		408,300	408,300

1006
EAST LONGMEADOW

RECORD OF OWNERSHIP

	BK-VOL/PAGE		SALE DATE	Q/U	V/I	SALE PRICE	VC
FERRERO WILLIAM DAVID	19511	0177	10-24-2012	U	I	100	1A
FERRERO WILLIAM DAVID,	18255	0588	04-14-2010	U	I	282,000	1S
FEDERAL HOME LOAN MORTGAGE,CORPO	18214	0549	03-12-2010	U	I	325,000	1L
FEDERAL HOME LOAN MORTGAGE,CORPO	17708	0127	03-06-2009	U	I	349,900	1L
MARTIN,CHRISTIAN	16276	0592	10-19-2006	U	I	1	1A

PREVIOUS ASSESSMENTS (HISTORY)

Year	Code	Assessed	Year	Code	Assessed	Year	Code	Assessed
2022	101	202,800	2021	101	194,900	2020	101	185,400
	101	132,200		101	123,000		101	123,000
	101	38,900		101	38,900		101	38,900
	Total	373,900		Total	356,800		Total	347,300

EXEMPTIONS

Year	Code	Description	Amount
		Total	0.00

OTHER ASSESSMENTS

Code	Description	YEAR	Amount	Comm Int

This signature acknowledges a visit by a Data Collector or Assessor

ASSESSING NEIGHBORHOOD

Nbhd	Nbhd Name		Tracing	Batch
0001			101	MG

NOTES

APPRAISED VALUE SUMMARY

Appraised BLDG. Value (Card)	223,600
Appraised Xf (B) Value (Bldg)	0
Appraised Ob (B) Value (Bldg)	38,900
Appraised Land Value (Bldg)	145,800
Special Land Value	0
Total Appraised Parcel Value	408,300
Valuation Method	C
Adjustment	
Net Total Appraised Parcel Value	408,300

BUILDING PERMIT RECORD

Permit Id	Issue Date	Type	Description	Amount	Insp Date	% Comp	Date Comp	Comments
201503040	12-10-2015	91	INSULATION	3,897		0		
118	05-13-2011	3	GARAGE	18,000				28X26 DETACHED
21	01-25-2011	9	ALTERATION	12,000				SHEET ROCK & FL

VISIT / CHANGE HISTORY

Date	Type	Is	Id	Cd	Purpose/Result
07-03-2019			334	3	MEAS+INSPCTD
06-14-2013			105	15	PERMIT VISIT
06-29-2012			317	15	PERMIT VISIT
06-29-2012			317	15	PERMIT VISIT
06-29-2012			317	15	PERMIT VISIT
02-24-2012			317	15	PERMIT VISIT
05-04-2010			317	3	MEAS+INSPCTD

LAND LINE VALUATION SECTION

B	Use Co	Description	Zone	D	Fronta	Depth	Land Units		Unit Price	I. Fact	S.A.	Ac Di	C. Fact	St. Idx	Adj	Notes	Special Pricing				Size A	Adj Unit Pric	Land Value
1	101	ONE FAM	RA				40,000	SF	2.84	1.200	7	LAND	1.00	MG	1.00			0			1.000	3.41	136,400
1	101	ONE FAM	RA				1.670	AC	7,000.00	1.000	0		0.80	MG	1.00	TOP3		0			1.000	5,600	9,400
						Total Card Land Units	2.59	AC	Parcel Total Land Area:		2.59											Total Land Value	145,800

Property Location 183 BROOKHAVEN DR | Map ID 71/ 50/ 63/ / | Bldg Name | State Use 101
Vision ID 5197 | Account # 5274 | Bldg # 1 | Sec # 1 of 1 | Card # 1 of 1 | Print Date 12-13-2022 8:37:18 A

CONSTRUCTION DETAIL

Element	Cd	Description
Style	21	SPLIT LEVL
Model	01	RESIDENTIAL
Grade	C+	AVG. (+)
Stories	1.00	1 STORY
Foundation	1	CONCRETE
Exterior Wall 1	4	VINYL
Exterior Wall 2	16	STONE VENR
Roof Structure	1	GABLE
Roof Cover	1	ASPHALT SH
Interior Wall 1	1	DRYWALL
Interior Wall 2		
Interior Floor 1	3	HARDWOOD
Interior Floor 2		
Heat Fuel	2	GAS
Heat Type	3	FORCED H/W
AC Type	03	FULL
Bedrooms	4	
Full Baths	2	
Half Baths	1	
Extra Fixtures	1	
Total Rooms	7	
Bath Style	A	AVERAGE
Half Bath Style	A	AVERAGE
Kitchens	1	
Kitchen Style	G	GOOD
Extra Kitchens	0	
Extra Kitchen St		
FBM Sqft	576	
FBM Quality	3	
Fireplaces	3	
WS Flues		
Central Vac	0	NO
Frame	1	WOOD

CONSTRUCTION DETAIL (CONTINUED)

Element	Cd	Description
Basement Floor	12	CONCRETE
Bsmt Garage	2	
#Heat Sys	1.00	
Units	1	

MIXED USE

Code	Description	Percentage
101	ONE FAM	100
		0
		0

COST / MARKET VALUATION

Adj Base Rate	105.44
RCN	354,997
Net Other Adj	
Year Built	1968
Effective Year Built	1984
Depreciation Code	AG
Remodel Rating	
Year Remodeled	
Depreciation %	37
Functional Obsol	
External Obsol	
Cost Trend Factor	1
Condition	
% Complete	
Overall % Condition	63
RCNLD	223,600
Dep % Ovr	
Dep Ovr Comment	
Misc Imp Ovr	
Misc Imp Ovr Comment	
Cost to Cure Ovr	
Cost to Cure Ovr Comment	

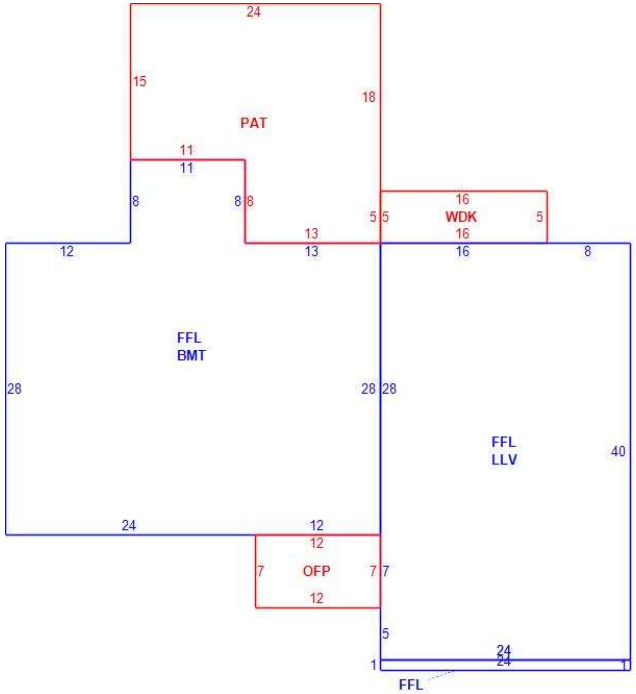

OB - OUTBUILDING & YARD ITEMS(L) / XF - BUILDING EXTRA FEATURES(B)

Code	Description	Su	Sub Type	Lan	Units	Unit Price	Yr Blt	%	Dep.	Cond	Gra	Qual	Apprais Va
12	POOL I-G			L	648	40.00	1976	60	0.00	AV	A	1.00	15,600
04	GARAGE/L			L	728	30.48	2012	70	0.00	GD	V	1.50	23,300

BUILDING SUB-AREA SUMMARY SECTION

Subarea	Description	Living	Gross	Eff Area	Unit Cost	Undeprec Value
BMT	BASEMENT	0	1,096		27.43	30,064
FFL	1ST FLOOR	2,080	2,080		137.28	285,535
LLV	LOWR LEVEL	0	960		34.32	32,946
OFP	OPEN PORCH	0	84		13.07	1,098
PAT	PATIO	0	464		6.80	3,157
WDK	WOOD DECK	0	80		27.46	2,196
	Ttl Gross Liv / Lease Area	2,080	4,764			354,997