Property Location 28 WINDING BROOK LN | Map ID 72/ 37/ 13/ / | Bldg Name | State Use 101
Vision ID 5250 | Account # 5327 | Bldg # 1 | Sec # 1 of 1 | Card # 1 of 1 | Print Date 12-13-2022 8:45:26 A

CURRENT OWNER	TOPO TYPE	UTILITY	STREET	LOCATION
ESTANISLAU PETER				
ESTANISLAU CAROLYN J	TOPO WET	EASEMENT	TRAFFIC	CORNER
28 WINDING BROOK LANE	DRAINAGE		VIEW	COMMUNITY
EAST LONGMEADOW MA 01028				

GIS ID F_391398_2854391

SUPPLEMENTAL DATA

Alt Prcl ID	Received
SP Permit	NIA
Chapter Land	Field 8
OC Dates	Field 9
In+Ex FY	Field 10
Mailed	Assoc Pid#

CURRENT ASSESSMENT

Description	Code	Appraised	Assessed
RESIDNTL.	101	337200	337,200
RES LAND	101	142100	142,100
RESIDNTL.	101	3800	3,800
Total		483,100	483,100

1006

EAST LONGMEADOW

RECORD OF OWNERSHIP

	BK-VOL/PAGE		SALE DATE	Q/U	V/I	SALE PRICE	VC
ESTANISLAU PETER	08723	0098	01-24-1994	U	V	60,000	
WOODBRIDGE ESTATES INC	00000	0000		U		0	

PREVIOUS ASSESSMENTS (HISTORY)

Year	Code	Assessed	Year	Code	Assessed	Year	Code	Assessed
2022	101	301,800	2021	101	288,900	2020	101	276,600
	101	144,500		101	134,100		101	134,100
	101	3,800		101	3,800		101	3,800
	Total	450,100		Total	426,800		Total	414,500

EXEMPTIONS

Year	Code	Description	Amount
		Total	0.00

OTHER ASSESSMENTS

Code	Description	YEAR	Amount	Comm Int

This signature acknowledges a visit by a Data Collector or Assessor

ASSESSING NEIGHBORHOOD

Nbhd	Nbhd Name		Tracing	Batch
0001			101	NV

NOTES

SUB DIV #660

APPRAISED VALUE SUMMARY

Appraised BLDG. Value (Card)	337,200
Appraised Xf (B) Value (Bldg)	0
Appraised Ob (B) Value (Bldg)	3,800
Appraised Land Value (Bldg)	142,100
Special Land Value	0
Total Appraised Parcel Value	483,100
Valuation Method	C
Adjustment	
Net Total Appraised Parcel Value	483,100

BUILDING PERMIT RECORD

Permit Id	Issue Date	Type	Description	Amount	Insp Date	% Comp	Date Comp	Comments
89	05-24-1999	11	POOL	11,000				
81	04-01-1994	MN	Manual Note	120,000				DWELLING

VISIT / CHANGE HISTORY

Date	Type	Is	Id	Cd	Purpose/Result
05-03-2018			333	4	INFO AT DOOR
09-14-2006			311	3	MEAS+INSPCTD
02-02-2000			250	22	MAILER SENT
01-12-2000			247	2	MEASURED
11-09-1999			247	15	PERMIT VISIT
12-31-1996			200	15	PERMIT VISIT
04-05-1996			107	15	PERMIT VISIT

LAND LINE VALUATION SECTION

B	Use Co	Description	Zone	D	Fronta	Depth	Land Units		Unit Price	I. Fact	S.A.	Ac Di	C. Fact	St. Idx	Adj	Notes	Special Pricing				Size A	Adj Unit Pric	Land Value
1	101	ONE FAM	RA				40,000	SF	2.84	1.250	9	LAND	1.00	NV	1.00			0			1.000	3.55	142,000
1	101	ONE FAM	RA				0.010	AC	7,000.00	1.000	0		1.00	NV	1.00			0			1.000	7,000	100
						Total Card Land Units	0.93	AC	Parcel Total Land Area:	0.93												Total Land Value	142,100

Property Location 28 WINDING BROOK LN | Map ID 72/ 37/ 13/ / | Bldg Name | State Use 101
Vision ID 5250 | Account # 5327 | Bldg # 1 | Sec # 1 of 1 | Card # 1 of 1 | Print Date 12-13-2022 8:45:26 A

CONSTRUCTION DETAIL

Element	Cd	Description
Style	19	RANCH
Model	01	RESIDENTIAL
Grade	C+	AVG. (+)
Stories	1.00	1 STORY
Foundation	1	CONCRETE
Exterior Wall 1	2	CLAPBOARD
Exterior Wall 2	8	BRICK VENR
Roof Structure	2	HIP
Roof Cover	1	ASPHALT SH
Interior Wall 1	1	DRYWALL
Interior Wall 2		
Interior Floor 1	4	CARPET
Interior Floor 2	3	HARDWOOD
Heat Fuel	2	GAS
Heat Type	3	FORCED H/W
AC Type	03	FULL
Bedrooms	3	
Full Baths	2	
Half Baths	0	
Extra Fixtures	3	
Total Rooms	8	
Bath Style	A	AVERAGE
Half Bath Style		
Kitchens	1	
Kitchen Style	A	AVERAGE
Extra Kitchens	0	
Extra Kitchen St		
FBM Sqft		
FBM Quality		
Fireplaces	0	
WS Flues	1	
Central Vac	1	YES
Frame	1	WOOD

CONSTRUCTION DETAIL (CONTINUED)

Element	Cd	Description
Basement Floor		
Bsmt Garage		
#Heat Sys	1.00	
Units	1	

MIXED USE

Code	Description	Percentage
101	ONE FAM	100
		0
		0

COST / MARKET VALUATION

Adj Base Rate	95.72
RCN	396,746
Net Other Adj	
Year Built	1994
Effective Year Built	2006
Depreciation Code	GD
Remodel Rating	
Year Remodeled	
Depreciation %	15
Functional Obsol	
External Obsol	
Cost Trend Factor	1
Condition	
% Complete	
Overall % Condition	85
RCNLD	337,200
Dep % Ovr	
Dep Ovr Comment	
Misc Imp Ovr	
Misc Imp Ovr Comment	
Cost to Cure Ovr	
Cost to Cure Ovr Comment	

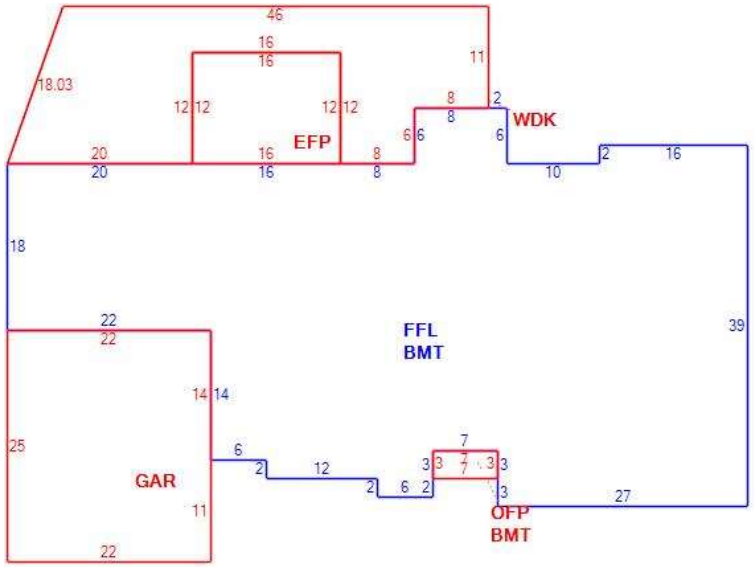

OB - OUTBUILDING & YARD ITEMS(L) / XF - BUILDING EXTRA FEATURES(B)

Code	Description	Su	Sub Type	Lan	Units	Unit Price	Yr Blt	%	Dep.	Cond	Gra	Qual	Apprais Va
09	POOL A-R	OB	Outbuildi	L	288	12.08	1999	70	0.00	GD	G	1.25	3,000
02	SHED/FR			L	120	7.48	2002	70	0.00	GD	G	1.25	800

BUILDING SUB-AREA SUMMARY SECTION

Subarea	Description	Living	Gross	Eff Area	Unit Cost	Undeprec Value
BMT	BASEMENT	0	2,541		22.89	58,167
EFP	ENCL PORCH	0	192		57.25	10,992
FFL	1ST FLOOR	2,520	2,520		114.50	288,543
GAR	GARAGE	0	550		45.80	25,190
OFP	OPEN PORCH	0	21		10.90	229
WDK	WOOD DECK	0	593		22.98	13,626
	Ttl Gross Liv / Lease Area	2,520	6,417			396,746