Property Location 31 OXFORD LN | Map ID 89/ 33/ 8A/ / | Bldg Name | State Use 101
Vision ID 5949 | Account # 6031 | Bldg # 1 | Sec # 1 of 1 | Card # 1 of 1 | Print Date 12-13-2022 10:37:35

CURRENT OWNER	TOPO TYPE	UTILITY	STREET	LOCATION
FERRENTINO JOSEPH				
FERRENTINO GIOVANNA L	TOPO WET	EASEMENT	TRAFFIC	CORNER
31 OXFORD LN	DRAINAGE		VIEW	COMMUNITY
EAST LONGMEADOW MA 01028				

SUPPLEMENTAL DATA

Alt Prcl ID	Received
SP Permit	NIA
Chapter Land	Field 8
OC Dates	Field 9
In+Ex FY	Field 10
Mailed	Assoc Pid#

GIS ID F_392754_2848657

CURRENT ASSESSMENT

Description	Code	Appraised	Assessed
RESIDNTL.	101	426900	426,900
RES LAND	101	143200	143,200
Total		570,100	570,100

1006

EAST LONGMEADOW

RECORD OF OWNERSHIP

	BK-VOL/PAGE		SALE DATE	Q/U	V/I	SALE PRICE	VC
FERRENTINO JOSEPH	09491	0460	05-17-1996	U	I	300,000	1S
THE BANK OF WESTERN MASS	09297	0189	11-02-1995	U	V	280,000	1L
GASPERINI MICHAEL J +	07451	0232	05-11-1990	U	I	1	1A
FERRRIS CYNTHIA M	07382	0042	02-02-1990	U	I	270,000	1
GASPERINI MICHAEL	07382	0042	02-02-1990	U	I	1	1F

PREVIOUS ASSESSMENTS (HISTORY)

Year	Code	Assessed	Year	Code	Assessed	Year	Code	Assessed
2022	101	382,700	2021	101	366,800	2020	101	351,900
	101	145,600		101	135,200		101	135,200
	Total	528,300		Total	502,000		Total	487,100

EXEMPTIONS

Year	Code	Description	Amount
		Total	0.00

OTHER ASSESSMENTS

Code	Description	YEAR	Amount	Comm Int

This signature acknowledges a visit by a Data Collector or Assessor

ASSESSING NEIGHBORHOOD

Nbhd	Nbhd Name		Tracing	Batch
0001			101	NV

NOTES

SUB DIV # 575 90 SALE INCLS 89-50-20

89-52-18SUB DIV #654

APPRAISED VALUE SUMMARY

Appraised BLDG. Value (Card)	426,900
Appraised Xf (B) Value (Bldg)	0
Appraised Ob (B) Value (Bldg)	0
Appraised Land Value (Bldg)	143,200
Special Land Value	0
Total Appraised Parcel Value	570,100
Valuation Method	C
Adjustment	
Net Total Appraised Parcel Value	570,100

BUILDING PERMIT RECORD

Permit Id	Issue Date	Type	Description	Amount	Insp Date	% Comp	Date Comp	Comments
41	03-01-1990	MN	Manual Note	135,000				RESIDENCE

VISIT / CHANGE HISTORY

Date	Type	Is	Id	Cd	Purpose/Result
06-26-2018			333	2	MEASURED
07-15-2005			274	3	MEAS+INSPCTD
01-03-2000			250	22	MAILER SENT
11-30-1999			247	2	MEASURED
08-06-1992			131	14	INSPECTED
01-16-1991			105	3	MEAS+INSPCTD

LAND LINE VALUATION SECTION

B	Use Co	Description	Zone	D	Fronta	Depth	Land Units		Unit Price	I. Fact	S.A.	Ac Di	C. Fact	St. Idx	Adj	Notes	Special Pricing				Size A	Adj Unit Pric	Land Value
1	101	ONE FAM	RA				40,000	SF	2.84	1.250	9	LAND	1.00	NV	1.00			0			1.000	3.55	142,000
1	101	ONE FAM	RA				0.170	AC	7,000.00	1.000	0		1.00	NV	1.00			0			1.000	7,000	1,200
						Total Card Land Units	1.09	AC	Parcel Total Land Area:	1.09												Total Land Value	143,200

Property Location 31 OXFORD LN | Map ID 89/ 33/ 8A/ / | Bldg Name | State Use 101
Vision ID 5949 | Account # 6031 | Bldg # 1 | Sec # 1 of 1 | Card # 1 of 1 | Print Date 12-13-2022 10:37:36

CONSTRUCTION DETAIL

Element	Cd	Description
Style	06	COLONIAL
Model	01	RESIDENTIAL
Grade	B	GOOD
Stories	2.00	2 STORY
Foundation	1	CONCRETE
Exterior Wall 1	8	BRICK VENR
Exterior Wall 2	2	CLAPBOARD
Roof Structure	2	HIP
Roof Cover	1	ASPHALT SH
Interior Wall 1	2	PLASTER
Interior Wall 2		
Interior Floor 1	3	HARDWOOD
Interior Floor 2	4	CARPET
Heat Fuel	2	GAS
Heat Type	1	FORCED H/A
AC Type	03	FULL
Bedrooms	4	
Full Baths	2	
Half Baths	2	
Extra Fixtures	3	
Total Rooms	10	
Bath Style	G	GOOD
Half Bath Style	G	GOOD
Kitchens	1	
Kitchen Style	G	GOOD
Extra Kitchens	0	
Extra Kitchen St		
FBM Sqft		
FBM Quality		
Fireplaces	1	
WS Flues		
Central Vac	1	YES
Frame	1	WOOD

CONSTRUCTION DETAIL (CONTINUED)

Element	Cd	Description
Basement Floor	12	CONCRETE
Bsmt Garage		
#Heat Sys	1.00	
Units	1	

MIXED USE

Code	Description	Percentage
101	ONE FAM	100
		0
		0

COST / MARKET VALUATION

Adj Base Rate	83.07
RCN	520,651
Net Other Adj	
Year Built	1990
Effective Year Built	2003
Depreciation Code	GD
Remodel Rating	
Year Remodeled	
Depreciation %	18
Functional Obsol	
External Obsol	
Cost Trend Factor	1
Condition	
% Complete	
Overall % Condition	82
RCNLD	426,900
Dep % Ovr	
Dep Ovr Comment	
Misc Imp Ovr	
Misc Imp Ovr Comment	
Cost to Cure Ovr	
Cost to Cure Ovr Comment	

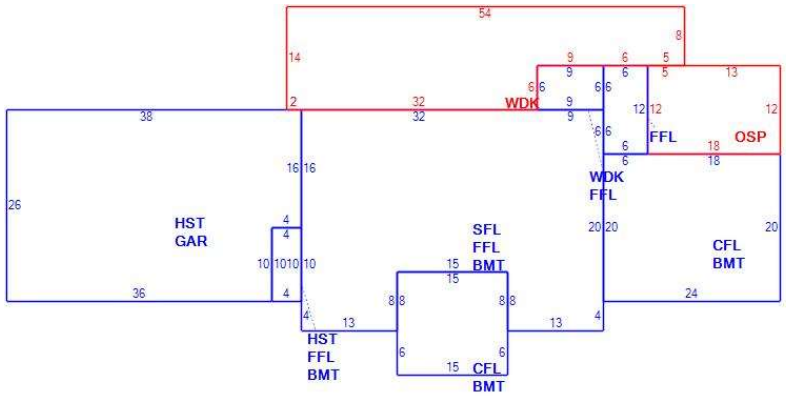

OB - OUTBUILDING & YARD ITEMS(L) / XF - BUILDING EXTRA FEATURES(B)

Code	Description	Su	Sub Type	Lan	Units	Unit Price	Yr Blt	%	Dep.	Cond	Gra	Qual	Apprais Va

BUILDING SUB-AREA SUMMARY SECTION

Subarea	Description	Living	Gross	Eff Area	Unit Cost	Undeprec Value
BMT	BASEMENT	0	1,840		22.86	42,064
CFL	CATHEDRAL CE	690	690		117.78	81,270
FFL	1ST FLOOR	1,276	1,276		114.30	145,851
GAR	GARAGE	0	1,000		45.72	45,721
HST	HALF STORY	520	1,040		57.15	59,438
OSP	SCRN PORCH	0	216		16.93	3,658
SFL	2ND FLOOR	1,110	1,110		114.30	126,877
WDK	WOOD DECK	0	690		22.86	15,774
	Ttl Gross Liv / Lease Area	3,596	7,862			520,651