Property Location 367 PINEHURST DR | Map ID 80/ 1/ 367/ / | Bldg Name | State Use 102
Vision ID 6501 | Account # 6604 | Bldg # 1 | Sec # 1 of 1 | Card # 1 of 1 | Print Date 12-13-2022 11:58:54

CURRENT OWNER	TOPO	UTILITIES	STRT / ROAD	LOCATION
OLLSON JOHN K				
OLLSON JOANNE E				
367 PINEHURST DR				
EAST LONGMEADOW MA 01028				

SUPPLEMENTAL DATA

Alt Prcl ID		Received	
SP Permit		NIA	
Chapter La		Field 8	
OC Dates		Field 9	
In+Ex FY		Field 10	
Mailed			
GIS ID	F_392090_2841032	Assoc Pid#	

CURRENT ASSESSMENT

Description	Code	Assessed	Assessed
RESIDNTL.	102	352,800	352,800
	Total	352,800	352,800

1006
EAST LONGMEADOW, MA

VISION

RECORD OF OWNERSHIP

	BK-VOL/PAGE		SALE DATE	Q/U	V/I	SALE PRICE	VC
OLLSON JOHN K	22350	0100	09-07-2018	Q	I	294,900	00
OCONNOR MAURICE L	13684	0445	10-16-2003	U	I	294,900	
ELMS RESIDENTIAL CONDOMINIUM ,TRUS	10388	0117	06-24-1998	U	I	1	1B
ROUTE 83 DEVELOPMENT	00000	0000		U		0	

PREVIOUS ASSESSMENTS (HISTORY)

Year	Code	Assessed	Year	Code	Assessed V	Year	Code	Assessed
2022	102	321,700	2021	102	310,500	2020	102	300,400
	Total	321,700		Total	310,500		Total	300,400

EXEMPTIONS

Year	Code	Description	Amount
		Total	0.00

OTHER ASSESSMENTS

Code	Description	Number	Amount	Comm Int

This signature acknowledges a visit by a Data Collector or Assessor

ASSESSING NEIGHBORHOOD

Nbhd	Nbhd Name	B	Tracing	Batch
0001			102	EL

NOTES

BUILDING 45

APPRAISED VALUE SUMMARY

Appraised Bldg. Value (Card)	352,800
Appraised Xf (B) Value (Bldg)	0
Appraised Ob (B) Value (Bldg)	0
Appraised Land Value (Bldg)	0
Special Land Value	0
Total Appraised Parcel Value	352,800
Valuation Method	C
Total Appraised Parcel Value	352,800

BUILDING PERMIT RECORD

Permit Id	Issue Date	Type	Description	Amount	Insp Date	% Comp	Date Comp	Comments
63	04-03-2002	49	CONDO R	150,000		0		OC 10/14/2003

VISIT / CHANGE HISTORY

Date	Id	Type	Is	Cd	Purpose/Result
07-25-2022	400			3	MEAS+INSPCTD
07-03-2018	333			2	MEASURED
03-20-2018	333			2	MEASURED
08-30-2004	250			14	INSPECTED
07-16-2004	328			16	FIELDREV CHG
07-09-2004	328			14	INSPECTED

LAND LINE VALUATION SECTION

B	Use Code	Description	Zone	Land Type	Land Units		Unit Price	Size Adj	Site Index	Cond.	Nbhd.	Nbhd. Adj	Notes	Location Adjustment		Adj Unit P	Land Value
1	102	CONDO	PUR	SITE	0	SF	0.00	1.00000		1.00	EL	1.000			0.0000	0	0
				Total Card Land Units	0	SF	Parcel Total Land Area			0.00					Total Land Value		0

Property Location 367 PINEHURST DR | Map ID 80/ 1/ 367/ / | Bldg Name | State Use 102
Vision ID 6501 | Account # 6604 | Bldg # 1 | Sec # 1 of 1 | Card # 1 of 1 | Print Date 12-13-2022 11:58:54

CONSTRUCTION DETAIL

Element	Cd	Description
Style	08	CONDO-TNHS
Model	05	RES CONDO
Grade	C+	AVG. (+)
Stories	1.00	1 STORY
Foundation	1	CONCRETE
Interior Wall 1	1	DRYWALL
Interior Wall 2		
Interior Floor 1	4	CARPET
Interior Floor 2		
Heat Fuel	2	GAS
Heat Type	1	FORCED H/A
AC Type	03	FULL
Bedrooms	2	
Full Baths	2	
Half Baths	0	
Extra Fixtures	0	
Total Rooms	5	
Bath Style	G	GOOD
Num Kitchens	1	
Kitchen Style	G	GOOD
FBM Sqft	800	
FBM Quality	3	FLA AVE
Fireplaces	0	
WS Flues	0	
Central Vac		No
Frame	1	WOOD
Bsmt Floor	12	CONCRETE
Bsmt Garage	0	
#Heat Sys	1	
Occupancy	1	
Int Vs Ext	S	

CONSTRUCTION DETAIL (CONTINUED)

Element	Cd	Description

CONDO DATA

Parcel Id	6769	C	0020	Owne	
	THE ELMS	B	1	S	1

Adjust Type	Code	Description	Factor%
Unit Type C			
Unit Locatio	E	END UNIT	

COST / MARKET VALUATION

Adj Base Rate	141.30
Building Value New	387,695
Year Built	2002
Effective Year Built	2012
Depreciation Code	GD
Remodel Rating	
Year Remodeled	
Depreciation %	9
Functional Obsol	
External Obsol	
Trend Factor	1
Condition	
Condition %	
Percent Good	91
Cns Sect Rcnld	352,800
Dep % Ovr	
Dep Ovr Comment	
Misc Imp Ovr	
Misc Imp Ovr Comment	
Cost to Cure Ovr	
Cost to Cure Ovr Comment	

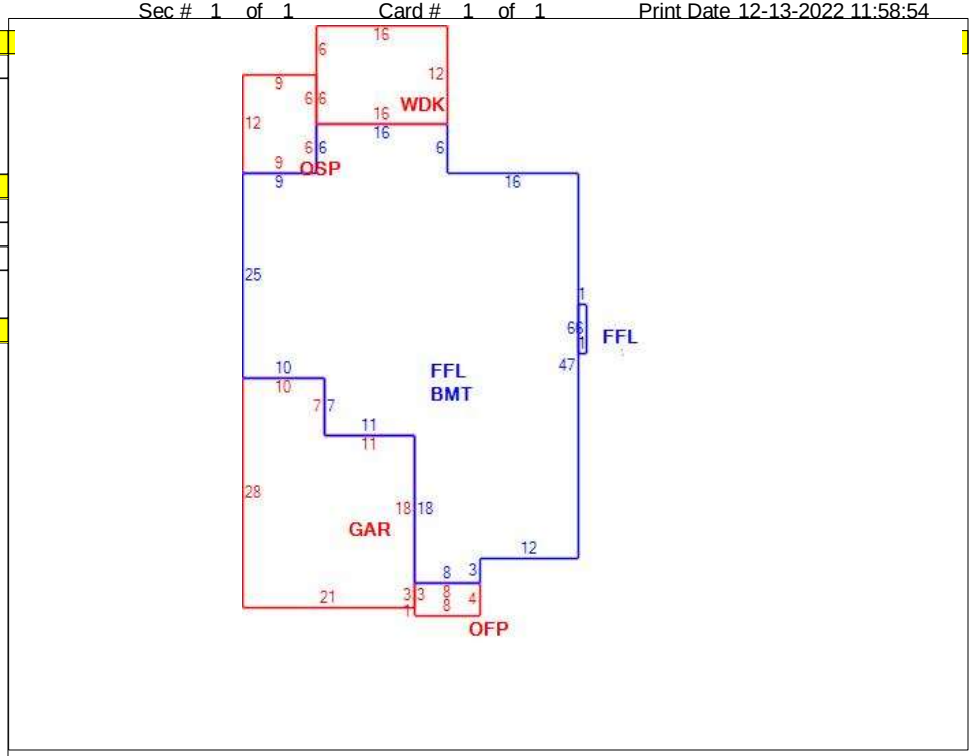

OB - OUTBUILDING & YARD ITEMS(L) / XF - BUILDING EXTRA FEATURES(B)

Code	Description	L/B	Units	Unit Price	Yr Blt	Cond. Cd	% Gd	Grade	Grade Adj.	Appr. Value

BUILDING SUB-AREA SUMMARY SECTION

Code	Description	Living Area	Floor Area	Eff Area	Unit Cost	Undeprec Value
BMT	BASEMENT	0	1,662		34.25	56,928
FFL	1ST FLOOR	1,668	1,668		171.47	286,013
GAR	GARAGE	0	511		68.45	34,980
OFP	OPEN PORCH	0	32		16.08	514
OSP	SCRN PORCH	0	108		25.40	2,744
WDK	WOOD DECK	0	192		33.94	6,516
	Ttl Gross Liv / Lease Area	1,668	4,173			387,695