Property Location 8 BLUEGRASS DR | Map ID 7/ 5/ 2/16/ / | Bldg Name | State Use 102
Vision ID 6847 | Account # 6969 | Bldg # 1 | Sec # 1 of 1 | Card # 1 of 1 | Print Date 12-13-2022 12:48:42

CURRENT OWNER

MACGOWAN CHARLES R LE
MACGOWAN CYNTHIA G LE
8 BLUEGRASS DR

EAST LONGMEADOW MA 01028

TOPO	UTILITIES	STRT / ROAD	LOCATION
	1 TYPCL		

SUPPLEMENTAL DATA

Alt Prcl ID		Received	
SP Permit		NIA	
Chapter La		Field 8	
OC Dates	6/21/2012	Field 9	
In+Ex FY		Field 10	
Mailed			
GIS ID	F_376625_2845743	Assoc Pid#	

CURRENT ASSESSMENT

Description	Code	Assessed	Assessed
RESIDNTL.	102	467,600	467,600
	Total	467,600	467,600

1006
EAST LONGMEADOW, MA

VISION

RECORD OF OWNERSHIP

	BK-VOL/PAGE		SALE DATE	Q/U	V/I	SALE PRICE	VC
MACGOWAN CHARLES R LE	23904	0199	05-26-2021	U	I	100	1A
MACGOWAN CHARLES R	19315	0492	06-22-2012	U	I	396,700	1
D R CHESTNUT LLC,	16302	0279	11-02-2006	U	I	3,562,500	1
RUGBY PROPERTIES LLC,	00000	0000		U		0	

PREVIOUS ASSESSMENTS (HISTORY)

Year	Code	Assessed	Year	Code	Assessed V	Year	Code	Assessed
2022	102	419,100	2021	102	406,700	2020	102	392,000
	Total	419,100		Total	406,700		Total	392,000

EXEMPTIONS

Year	Code	Description	Amount
		Total	0.00

OTHER ASSESSMENTS

Code	Description	Number	Amount	Comm Int

This signature acknowledges a visit by a Data Collector or Assessor

ASSESSING NEIGHBORHOOD

Nbhd	Nbhd Name	B	Tracing	Batch
0001			102	FC

NOTES

APPRAISED VALUE SUMMARY

Appraised Bldg. Value (Card)	467,600
Appraised Xf (B) Value (Bldg)	0
Appraised Ob (B) Value (Bldg)	0
Appraised Land Value (Bldg)	0
Special Land Value	0
Total Appraised Parcel Value	467,600
Valuation Method	C
Total Appraised Parcel Value	467,600

BUILDING PERMIT RECORD

Permit Id	Issue Date	Type	Description	Amount	Insp Date	% Comp	Date Comp	Comments
201102503	09-02-2011	49	CONDO R	300,000				OC 6/21/2012 47X62 SINGL

VISIT / CHANGE HISTORY

Date	Id	Type	Is	Cd	Purpose/Result
07-25-2022	400			3	MEAS+INSPCTD
06-20-2012	400			25	OC VISIT
05-04-2012	317			15	PERMIT VISIT
05-04-2012	317			2	MEASURED

LAND LINE VALUATION SECTION

B	Use Code	Description	Zone	Land Type	Land Units		Unit Price	Size Adj	Site Index	Cond.	Nbhd.	Nbhd. Adj	Notes	Location Adjustment		Adj Unit P	Land Value
1	102	CONDO	PAR	SITE	0	SF	0.00	1.00000		1.00	FC	1.000	94 UNITS		0.0000	0	0
				Total Card Land Units	0	SF	Parcel Total Land Area			0.00					Total Land Value		0

Property Location 8 BLUEGRASS DR | Map ID 7/ 5/ 2/16/ / | Bldg Name | State Use 102
Vision ID 6847 | Account # 6969 | Bldg # 1 | Sec # 1 of 1 | Card # 1 of 1 | Print Date 12-13-2022 12:48:42

CONSTRUCTION DETAIL

Element	Cd	Description
Style	07	CONDO-GRDN
Model	05	RES CONDO
Grade	C+	AVG. (+)
Stories	1.00	1 STORY
Foundation	1	CONCRETE
Interior Wall 1	1	DRYWALL
Interior Wall 2		
Interior Floor 1	3	HARDWOOD
Interior Floor 2	4	CARPET
Heat Fuel	2	GAS
Heat Type	1	FORCED H/A
AC Type	03	FULL
Bedrooms	2	
Full Baths	2	
Half Baths	0	
Extra Fixtures	1	
Total Rooms	5	
Bath Style	V	VERY GOOD
Num Kitchens	1	
Kitchen Style	G	GOOD
FBM Sqft	0	
FBM Quality		
Fireplaces	1	
WS Flues	0	
Central Vac		No
Frame	1	WOOD
Bsmt Floor	12	CONCRETE
Bsmt Garage	0	
#Heat Sys	1	
Occupancy	1	
Int Vs Ext	S	

CONSTRUCTION DETAIL (CONTINUED)

Element	Cd	Description

CONDO DATA

Parcel Id	5049	C	0010	Owne	
	CHESTNUT	B	1	S	1

Adjust Type	Code	Description	Factor%
Unit Type C			
Unit Locatio	D	DETACHED	

COST / MARKET VALUATION

Adj Base Rate	132.73
Building Value New	492,239
Year Built	2011
Effective Year Built	2016
Depreciation Code	GD
Remodel Rating	
Year Remodeled	
Depreciation %	5
Functional Obsol	
External Obsol	
Trend Factor	1
Condition	
Condition %	
Percent Good	95
Cns Sect Rcnld	467,600
Dep % Ovr	
Dep Ovr Comment	
Misc Imp Ovr	
Misc Imp Ovr Comment	
Cost to Cure Ovr	
Cost to Cure Ovr Comment	

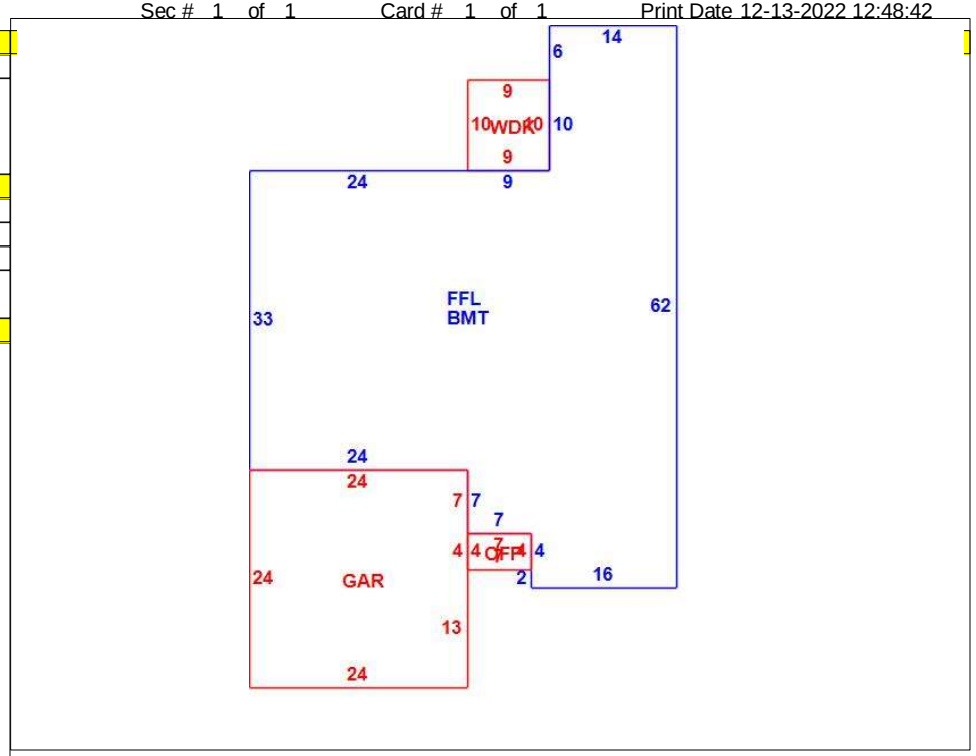

OB - OUTBUILDING & YARD ITEMS(L) / XF - BUILDING EXTRA FEATURES(B)

Code	Description	L/B	Units	Unit Price	Yr Blt	Cond. Cd	% Gd	Grade	Grade Adj.	Appr. Value

BUILDING SUB-AREA SUMMARY SECTION

Code	Description	Living Area	Floor Area	Eff Area	Unit Cost	Undeprec Value
BMT	BASEMENT	0	2,032		36.58	74,321
FFL	1ST FLOOR	2,032	2,032		183.06	371,971
GAR	GARAGE	0	576		73.10	42,103
OFP	OPEN PORCH	0	28		19.61	549
WDK	WOOD DECK	0	90		36.61	3,295
	Ttl Gross Liv / Lease Area	2,032	4,758			492,239