Property Location 41 BROADLEAF CR | Map ID 7/ 5/ 1/19/ / | Bldg Name | State Use 102
Vision ID 7192 | Account # 7192 | Bldg # 1 | Sec # 1 of 1 | Card # 1 of 1 | Print Date 12-13-2022 12:58:49

CURRENT OWNER	TOPO	UTILITIES	STRT / ROAD	LOCATION
SHAPIRO ELLEN		1 TYPCL		
41 BROADLEAF CR				
EAST LONGMEADOW MA 01028				

SUPPLEMENTAL DATA

Alt Prcl ID	75119	Received	
SP Permit		NIA	
Chapter La		Field 8	
OC Dates	10/13/2015	Field 9	
In+Ex FY		Field 10	
Mailed			
GIS ID	F_376625_2845743	Assoc Pid#	

CURRENT ASSESSMENT

Description	Code	Assessed	Assessed
RESIDNTL.	102	589,100	589,100
	Total	589,100	589,100

1006
EAST LONGMEADOW, MA

VISION

RECORD OF OWNERSHIP

	BK-VOL/PAGE		SALE DATE	Q/U	V/I	SALE PRICE	VC
SHAPIRO ELLEN	20912	0506	10-15-2015	U	I	541,000	1
D R CHESTNUT	16302	0279	11-02-2006	U	I	3,562,500	1

PREVIOUS ASSESSMENTS (HISTORY)

Year	Code	Assessed	Year	Code	Assessed V	Year	Code	Assessed
2022	102	547,900	2021	102	532,700	2020	102	515,000
	Total	547,900		Total	532,700		Total	515,000

EXEMPTIONS

Year	Code	Description	Amount
		Total	0.00

OTHER ASSESSMENTS

Code	Description	Number	Amount	Comm Int

This signature acknowledges a visit by a Data Collector or Assessor

ASSESSING NEIGHBORHOOD

Nbhd	Nbhd Name	B	Tracing	Batch
0001			102	MA

NOTES

APPRAISED VALUE SUMMARY

Appraised Bldg. Value (Card)	589,100
Appraised Xf (B) Value (Bldg)	0
Appraised Ob (B) Value (Bldg)	0
Appraised Land Value (Bldg)	0
Special Land Value	0
Total Appraised Parcel Value	589,100
Valuation Method	C
Total Appraised Parcel Value	589,100

BUILDING PERMIT RECORD

Permit Id	Issue Date	Type	Description	Amount	Insp Date	% Comp	Date Comp	Comments
201500897	04-23-2015	49	CONDO R	345,000	06-19-2015	100	10-13-2015	OC 10/13/2015 FIN BMT, TW

VISIT / CHANGE HISTORY

Date	Id	Type	Is	Cd	Purpose/Result
07-25-2022	400			2	MEASURED
10-13-2015	400	01		25	OC VISIT
06-19-2015	317			2	MEASURED
05-22-2015	317			15	PERMIT VISIT

LAND LINE VALUATION SECTION

B	Use Code	Description	Zone	Land Type	Land Units		Unit Price	Size Adj	Site Index	Cond.	Nbhd.	Nbhd. Adj	Notes	Location Adjustment		Adj Unit P	Land Value
1	102	CONDO	PAR	SITE	0	SF		1.00000		1.00	FC	1.000			0.0000	0	0
				Total Card Land Units	0	SF	Parcel Total Land Area			0.00					Total Land Value		0

Property Location 41 BROADLEAF CR | Map ID 7/ 5/ 1/19/ / | Bldg Name | State Use 102
Vision ID 7192 | Account # 7192 | Bldg # 1 | Sec # 1 of 1 | Card # 1 of 1 | Print Date 12-13-2022 12:58:50

CONSTRUCTION DETAIL

Element	Cd	Description
Style	07	CONDO-GRDN
Model	05	RES CONDO
Grade	B	GOOD
Stories	1.00	1 STORY
Foundation	1	CONCRETE
Interior Wall 1	1	DRYWALL
Interior Wall 2		
Interior Floor 1	3	HARDWOOD
Interior Floor 2	4	CARPET
Heat Fuel	2	GAS
Heat Type	1	FORCED H/A
AC Type	03	FULL
Bedrooms	2	
Full Baths	3	
Half Baths	0	
Extra Fixtures	1	
Total Rooms	5	
Bath Style	G	GOOD
Num Kitchens	1	
Kitchen Style	G	GOOD
FBM Sqft	1315	
FBM Quality	5	FLA VG
Fireplaces	1	
WS Flues	0	
Central Vac		Yes
Frame	1	WOOD
Bsmt Floor	12	CONCRETE
Bsmt Garage	0	
#Heat Sys	1	
Occupancy	1	
Int Vs Ext	S	

CONSTRUCTION DETAIL (CONTINUED)

Element	Cd	Description

CONDO DATA

Parcel Id	5049	C	0010	Owne	
	CHESTNUT	B	1	S	1

Adjust Type	Code	Description	Factor%
Unit Type C	S	SUP IMP	
Unit Locatio	D	DETACHED	

COST / MARKET VALUATION

Adj Base Rate	143.87
Building Value New	607,345
Year Built	2015
Effective Year Built	2018
Depreciation Code	GD
Remodel Rating	
Year Remodeled	
Depreciation %	3
Functional Obsol	0
External Obsol	0
Trend Factor	1
Condition	
Condition %	
Percent Good	97
Cns Sect Rcnld	589,100
Dep % Ovr	
Dep Ovr Comment	
Misc Imp Ovr	
Misc Imp Ovr Comment	
Cost to Cure Ovr	
Cost to Cure Ovr Comment	

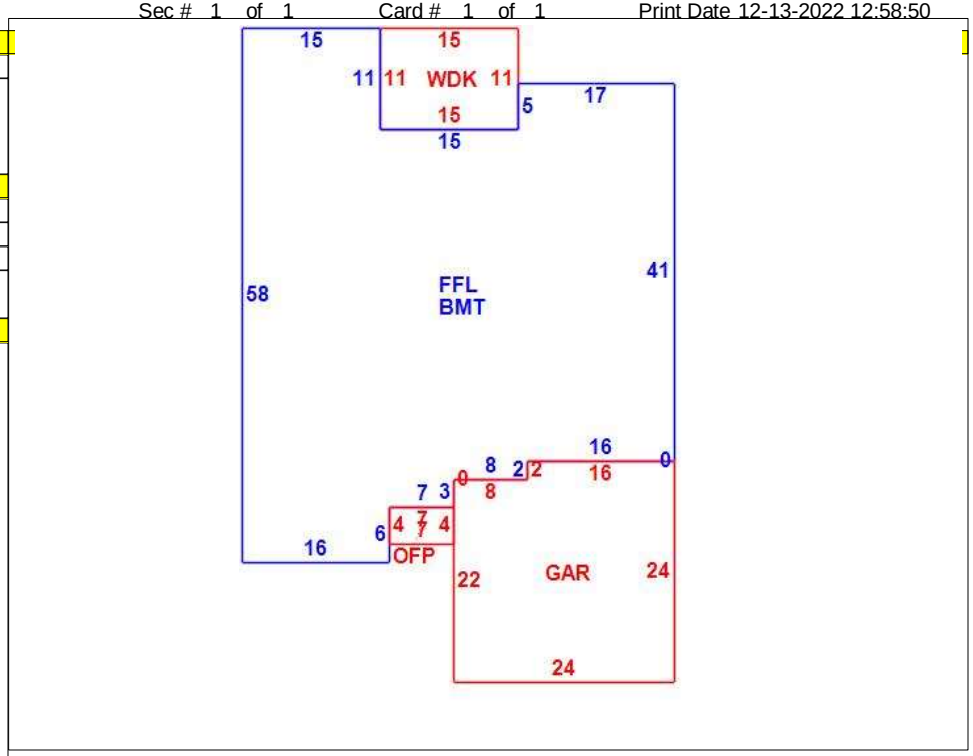

OB - OUTBUILDING & YARD ITEMS(L) / XF - BUILDING EXTRA FEATURES(B)

Code	Description	L/B	Units	Unit Price	Yr Blt	Cond. Cd	% Gd	Grade	Grade Adj.	Appr. Value

BUILDING SUB-AREA SUMMARY SECTION

Code	Description	Living Area	Floor Area	Eff Area	Unit Cost	Undeprec Value
BMT	BASEMENT	0	2,169		42.45	92,067
FFL	1ST FLOOR	2,169	2,169		212.14	460,123
GAR	GARAGE	0	560		84.85	47,518
OFP	OPEN PORCH	0	28		22.73	636
WDK	WOOD DECK	0	165		42.43	7,000
	Ttl Gross Liv / Lease Area	2,169	5,091			607,344