Property Location 271 PROSPECT ST | Map ID 29/ 55/ 0/ / | Bldg Name | State Use 101
Vision ID 2285 | Account # 2325 | Bldg # 1 | Sec # 1 of 1 | Card # 1 of 1 | Print Date 11/13/2023 10:36:21

CURRENT OWNER	TOPO TYPE	UTILITY	STREET	LOCATION
FITZPATRICK DEIRDRE L				
	TOPO WET	EASEMENT	TRAFFIC	CORNER
271 PROSPECT ST				
	DRAINAGE		VIEW	COMMUNITY
EAST LONGMEADOW MA 01028				

SUPPLEMENTAL DATA

Alt Prcl ID	Received
SP Permit	NIA
Chapter Land	Field 8
OC Dates	Field 9
In+Ex FY	Field 10
Mailed	Assoc Pid#

GIS ID F_381437_2846033

CURRENT ASSESSMENT

Description	Code	Appraised	Assessed
RESIDNTL.	101	223200	223,200
RES LAND	101	132700	132,700
RESIDNTL.	101	2700	2,700
Total		358,600	358,600

1006

EAST LONGMEADOW

RECORD OF OWNERSHIP

	BK-VOL/PAGE		SALE DATE	Q/U	V/I	SALE PRICE	VC
FITZPATRICK DEIRDRE L	23232	0001	05-28-2020	Q	I	305,000	00
ECKERS CHRISTOPHER M	20960	0415	11-20-2015	Q	I	231,500	00
DAMICO MARIA	17825	0031	06-01-2009	U	I	248,000	
SAFFORD,DEAN W	10246	0506	04-17-1998	U	I	146,500	
BERNARD KENNETH R +,	06428	0213	03-26-1987	U	I	136,000	

PREVIOUS ASSESSMENTS (HISTORY)

Year	Code	Assessed	Year	Code	Assessed	Year	Code	Assessed
2023	101	204,700	2022	101	184,700	2021	101	177,000
	101	119,200		101	107,700		101	99,800
	101	1,700		101	1,700		101	1,700
	Total	325,600		Total	294,100		Total	278,500

EXEMPTIONS

Year	Code	Description	Amount
		Total	

OTHER ASSESSMENTS

Code	Description	YEAR	Amount	Comm Int

This signature acknowledges a visit by a Data Collector or Assessor

ASSESSING NEIGHBORHOOD

Nbhd	Nbhd Name		Tracing	Batch
0001			101	MG

NOTES

APPRAISED VALUE SUMMARY

Appraised BLDG. Value (Card)	223,200
Appraised Xf (B) Value (Bldg)	0
Appraised Ob (B) Value (Bldg)	2,700
Appraised Land Value (Bldg)	132,700
Special Land Value	0
Total Appraised Parcel Value	358,600
Valuation Method	C
Adjustment	
Net Total Appraised Parcel Value	358,600

BUILDING PERMIT RECORD

Permit Id	Issue Date	Type	Description	Amount	Insp Date	% Comp	Date Comp	Comments
202201804	05-18-2022	25	WINDOWS	6,947	05-22-2023	100	08-18-2022	2 NEW WIND-NVC
202101644	05-03-2021	21	SIDING	19,840	06-30-2021	100	06-04-2021	& 3 WINDOWS
202002391	08-25-2020	91	INSULATION	8,959		0		
201903283	11-19-2019	25	WINDOWS	4,328	05-22-2020	100	12-23-2019	REPLACE ENTRY D
201702015	07-10-2017	62	SOLAR	22,400	11-30-2017	100	11-30-2017	
201102915	01-17-2012	12	REROOF	5,500				INC SIDING
95	05-29-1998	9	ALTERATION	33,055				

VISIT / CHANGE HISTORY

Date	Type	Is	Id	Cd	Purpose/Result
05-22-2023			425	15	PERMIT VISIT
06-30-2021			400	15	PERMIT VISIT
05-22-2020			400	15	PERMIT VISIT
11-30-2017			400	15	PERMIT VISIT
06-15-2012			317	15	PERMIT VISIT
02-10-2010			317	16	FIELDREV CHG
09-12-2003			274	3	MEAS+INSPCTD

LAND LINE VALUATION SECTION

B	Use Co	Description	Zone	D	Fronta	Depth	Land Units		Unit Price	I. Fact	S.A.	Ac Di	C. Fact	St. Idx	Adj	Notes	Special Pricing				Size A	Adj Unit Pric	Land Value
1	101	ONE FAM	RA				32,932	SF	3.73	1.200	7	LAND	1.00	MG	1.00			0	TRF1	0.9	1.000	4.03	132,700
						Total Card Land Units	0.76	AC	Parcel Total Land Area:			0.76										Total Land Value	132,700

Property Location 271 PROSPECT ST | Map ID 29/ 55/ 0/ / | Bldg Name | State Use 101
Vision ID 2285 | Account # 2325 | Bldg # 1 | Sec # 1 of 1 | Card # 1 of 1 | Print Date 11/13/2023 10:36:22

CONSTRUCTION DETAIL

Element	Cd	Description
Style	19	RANCH
Model	01	RESIDENTIAL
Grade	C+	AVG. (+)
Stories	1.00	1 STORY
Foundation	1	CONCRETE
Exterior Wall 1	4	VINYL
Exterior Wall 2		
Roof Structure	1	GABLE
Roof Cover	1	ASPHALT SH
Interior Wall 1	1	DRYWALL
Interior Wall 2		
Interior Floor 1	3	HARDWOOD
Interior Floor 2		
Heat Fuel	2	GAS
Heat Type	1	FORCED H/A
AC Type	03	FULL
Bedrooms	2	
Full Baths	1	
Half Baths	1	
Extra Fixtures	1	
Total Rooms	5	
Bath Style	G	GOOD
Half Bath Style	A	AVERAGE
Kitchens	1	
Kitchen Style	G	GOOD
Extra Kitchens	0	
Extra Kitchen St	N	NONE
FBM Sqft		
FBM Quality		
Fireplaces	1	
WS Flues	0	
Central Vac	0	NO
Frame	1	WOOD

CONSTRUCTION DETAIL (CONTINUED)

Element	Cd	Description
Basement Floor	12	CONCRETE
Bsmt Garage	0	
#Heat Sys	1.00	
Units	1	

MIXED USE

Code	Description	Percentage
101	ONE FAM	100
		0
		0

COST / MARKET VALUATION

Adj Base Rate	117.51
RCN	318,889
Net Other Adj	
Year Built	1950
Effective Year Built	1991
Depreciation Code	GD
Remodel Rating	
Year Remodeled	
Depreciation %	30
Functional Obsol	
External Obsol	
Cost Trend Factor	1
Condition	
% Complete	
Overall % Condition	70
RCNLD	223,200
Dep % Ovr	
Dep Ovr Comment	
Misc Imp Ovr	
Misc Imp Ovr Comment	
Cost to Cure Ovr	
Cost to Cure Ovr Comment	

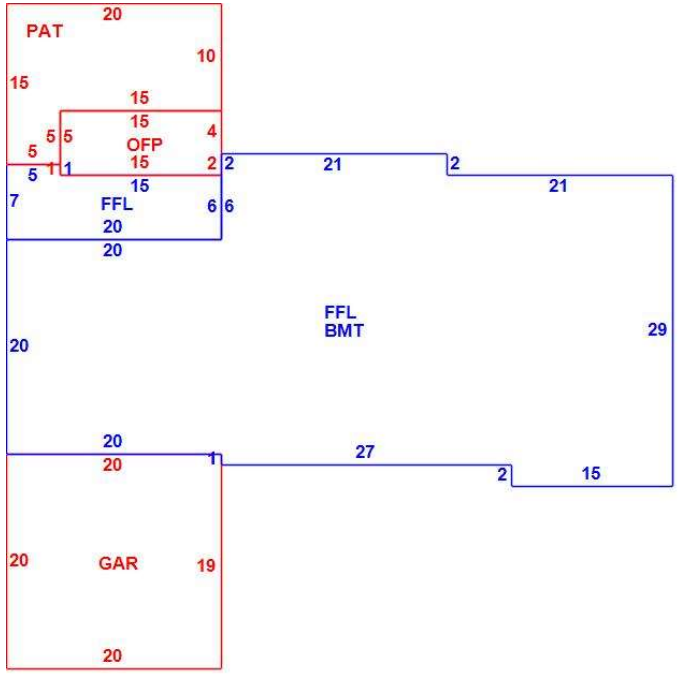

OB - OUTBUILDING & YARD ITEMS(L) / XF - BUILDING EXTRA FEATURES(B)

Code	Description	Su	Sub Type	Lan	Units	Unit Price	Yr Blt	%	Dep.	Cond	Gra	Qual	Apprais Va
02	SHED/FR			L	144	12.00	1975	60	0.00	AV	A	1.00	1,000
22	WOOD DK			L	166	15.00	2000	70	0.00	GD	A	1.00	1,700
SOL	Solar Panels	EX	Extra Fea	B	1	0.00	1988	70	1.00			0.00	0

BUILDING SUB-AREA SUMMARY SECTION

Subarea	Description	Living	Gross	Eff Area	Unit Cost	Undeprec Value
BMT	BASEMENT	0	1,606		28.56	45,862
FFL	1ST FLOOR	1,731	1,731		142.87	247,310
GAR	GARAGE	0	400		57.15	22,859
OFP	OPEN PORCH	0	90		14.29	1,286
PAT	PATIO	0	225		6.98	1,572
	Ttl Gross Liv / Lease Area	1,731	4,052			318,889