Property Location 61 PROSPECT HILLS DR | Map ID 42/ 43/ 43/ / | Bldg Name | State Use 101
Vision ID 3573 | Account # 3630 | Bldg # 1 | Sec # 1 of 1 | Card # 1 of 1 | Print Date 11/14/2023 2:09:05 A

CURRENT OWNER	TOPO TYPE	UTILITY	STREET	LOCATION
SMITH SEAN				
	TOPO WET	EASEMENT	TRAFFIC	CORNER
61 PROSPECT HILLS DR				
	DRAINAGE		VIEW	COMMUNITY
EAST LONGMEADOW MA 01028				

GIS ID F_384097_2844215

SUPPLEMENTAL DATA

Alt Prcl ID	Received
SP Permit	NIA
Chapter Land	Field 8
OC Dates	Field 9
In+Ex FY	Field 10
Mailed	Assoc Pid#

CURRENT ASSESSMENT

Description	Code	Appraised	Assessed
RESIDNTL.	101	577200	577,200
RES LAND	101	194400	194,400
Total		771,600	771,600

1006

EAST LONGMEADOW

RECORD OF OWNERSHIP

	BK-VOL/PAGE		SALE DATE	Q/U	V/I	SALE PRICE	VC
SMITH SEAN	23506	0062	10-30-2020	U	I	540,000	1L
US BANK NATIONAL ASSOCIATION	22526	0391	01-18-2019	U	I	474,900	1L
LUCIA THOMAS A JR	16427	0517	01-03-2007	U	I	1	1A
LUCIA,THOMAS A JR	11439	0378	12-11-2000	U	V	115,000	
COELHO MANUEL R + GEORGETTE,	09284	0468	10-23-1995	U	V	60,000	

PREVIOUS ASSESSMENTS (HISTORY)

Year	Code	Assessed	Year	Code	Assessed	Year	Code	Assessed
2023	101	535,800	2022	101	482,600	2021	101	460,400
	101	176,800		101	181,600		101	168,000
	Total	712,600		Total	664,200		Total	628,400

EXEMPTIONS

Year	Code	Description	Amount
		Total	

OTHER ASSESSMENTS

Code	Description	YEAR	Amount	Comm Int

This signature acknowledges a visit by a Data Collector or Assessor

ASSESSING NEIGHBORHOOD

Nbhd	Nbhd Name		Tracing	Batch
0001			101	NS

NOTES

SUB DIV #594

APPRAISED VALUE SUMMARY

Appraised BLDG. Value (Card)	577,200
Appraised Xf (B) Value (Bldg)	0
Appraised Ob (B) Value (Bldg)	0
Appraised Land Value (Bldg)	194,400
Special Land Value	0
Total Appraised Parcel Value	771,600
Valuation Method	C
Adjustment	
Net Total Appraised Parcel Value	771,600

BUILDING PERMIT RECORD

Permit Id	Issue Date	Type	Description	Amount	Insp Date	% Comp	Date Comp	Comments
202003203	12-28-2020	4	ADDITION	13,300	07-05-2021	100	07-05-2021	14X19 BALCONY O
201702612	10-31-2017	17	DECK	9,000	06-13-2019	0	06-13-2019	646 SF NO START 2
169	07-08-2003	2	DWELLING	480,000				OC 6/15/2005

VISIT / CHANGE HISTORY

Date	Type	Is	Id	Cd	Purpose/Result
07-05-2021			334	15	PERMIT VISIT
06-13-2019			400	15	PERMIT VISIT
02-28-2018			333	15	PERMIT VISIT
02-19-2016			317	3	MEAS+INSPCTD
11-14-2012			317	2	MEASURED
10-30-2006			250	22	MAILER SENT
01-05-2005			311	15	PERMIT VISIT

LAND LINE VALUATION SECTION

B	Use Co	Description	Zone	D	Fronta	Depth	Land Units		Unit Price	I. Fact	S.A.	Ac Di	C. Fact	St. Idx	Adj	Notes	Special Pricing				Size A	Adj Unit Pric	Land Value
1	101	ONE FAM	RAA				40,000	SF	3.12	1.550	2	LAND	1.00	NS	1.00			0			1.000	4.84	193,600
1	101	ONE FAM	RAA				0.110	AC	7,000.00	1.000	0		1.00	NS	1.00			0			1.000	7,000	800
						Total Card Land Units	1.03	AC	Parcel Total Land Area:	1.03												Total Land Value	194,400

Property Location 61 PROSPECT HILLS DR | Map ID 42/ 43/ 43/ / | Bldg Name | State Use 101
Vision ID 3573 | Account # 3630 | Bldg # 1 | Sec # 1 of 1 | Card # 1 of 1 | Print Date 11/14/2023 2:09:06 A

CONSTRUCTION DETAIL

Element	Cd	Description
Style	06	COLONIAL
Model	01	RESIDENTIAL
Grade	B	GOOD
Stories	2.00	2 STORY
Foundation	1	CONCRETE
Exterior Wall 1	6	STUCCO
Exterior Wall 2	8	BRICK VENR
Roof Structure	1	GABLE
Roof Cover	1	ASPHALT SH
Interior Wall 1	1	DRYWALL
Interior Wall 2		
Interior Floor 1	3	HARDWOOD
Interior Floor 2		
Heat Fuel	2	GAS
Heat Type	1	FORCED H/A
AC Type	03	FULL
Bedrooms	4	
Full Baths	3	
Half Baths	1	
Extra Fixtures	3	
Total Rooms	7	
Bath Style	G	GOOD
Half Bath Style	G	GOOD
Kitchens	1	
Kitchen Style	G	GOOD
Extra Kitchens	0	
Extra Kitchen St		
FBM Sqft		
FBM Quality		
Fireplaces	3	
WS Flues		
Central Vac	1	YES
Frame	1	WOOD

CONSTRUCTION DETAIL (CONTINUED)

Element	Cd	Description
Basement Floor	12	CONCRETE
Bsmt Garage		
#Heat Sys	1.00	
Units	1	

MIXED USE

Code	Description	Percentage
101	ONE FAM	100
		0
		0

COST / MARKET VALUATION

Adj Base Rate	89.28
RCN	648,544
Net Other Adj	
Year Built	2003
Effective Year Built	2010
Depreciation Code	GD
Remodel Rating	
Year Remodeled	
Depreciation %	11
Functional Obsol	
External Obsol	
Cost Trend Factor	1
Condition	
% Complete	
Overall % Condition	89
RCNLD	577,200
Dep % Ovr	
Dep Ovr Comment	
Misc Imp Ovr	
Misc Imp Ovr Comment	
Cost to Cure Ovr	
Cost to Cure Ovr Comment	

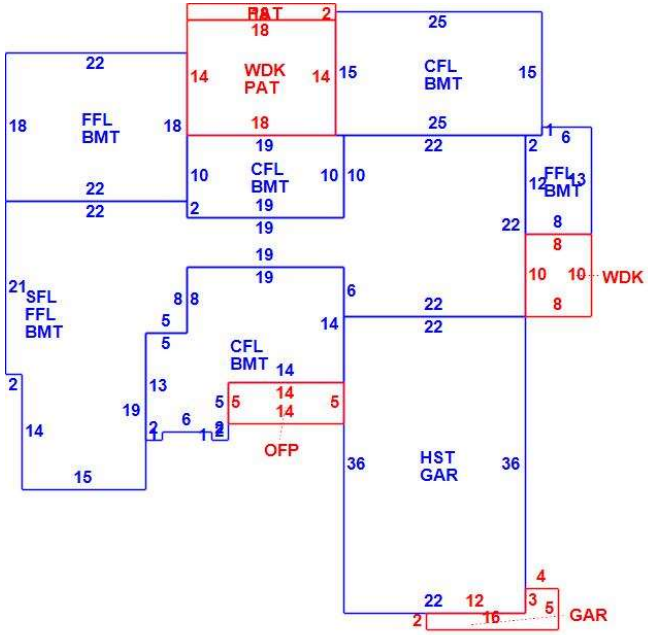

OB - OUTBUILDING & YARD ITEMS(L) / XF - BUILDING EXTRA FEATURES(B)

Code	Description	Su	Sub Type	Lan	Units	Unit Price	Yr Blt	%	Dep.	Cond	Gra	Qual	Apprais Va

BUILDING SUB-AREA SUMMARY SECTION

Subarea	Description	Living	Gross	Eff Area	Unit Cost	Undeprec Value
BMT	BASEMENT	0	2,668		24.53	65,443
CFL	CATHEDRAL CE	925	925		126.26	116,792
FFL	1ST FLOOR	1,743	1,743		122.55	213,608
GAR	GARAGE	0	836		48.96	40,932
HST	HALF STORY	396	792		61.28	48,531
OFP	OPEN PORCH	0	70		12.26	858
PAT	PATIO	0	288		5.96	1,716
SFL	2ND FLOOR	1,245	1,245		122.55	152,577
WDK	WOOD DECK	0	332		24.36	8,088
	Ttl Gross Liv / Lease Area	4,309	8,899			648,544