Property Location 65 RIDGE RD | Map ID 47/ 43/ 72/ / | Bldg Name | State Use 101
Vision ID 3739 | Account # 3803 | Bldg # 1 | Sec # 1 of 1 | Card # 1 of 1 | Print Date 11/14/2023 2:37:06 A

| CURRENT OWNER | TOPO TYPE | UTILITY | STREET | LOCATION |
|---|---|---|---|---|
| POLIMENI NICOLA | | | | |
| VOCI RACHEL | TOPO WET | EASEMENT | TRAFFIC | CORNER |
| 65 RIDGE RD | DRAINAGE | | VIEW | COMMUNITY |
| EAST LONGMEADOW MA 01028 | | | | |

GIS ID F_385377_2854926

**SUPPLEMENTAL DATA**

| | |
|---|---|
| Alt Prcl ID | Received |
| SP Permit | NIA |
| Chapter Land | Field 8 |
| OC Dates | Field 9 |
| In+Ex FY | Field 10 |
| Mailed | Assoc Pid# |

**CURRENT ASSESSMENT**

| Description | Code | Appraised | Assessed |
|---|---|---|---|
| RESIDNTL. | 101 | 269300 | 269,300 |
| RES LAND | 101 | 141200 | 141,200 |
| RESIDNTL. | 101 | 13900 | 13,900 |
| Total | | 424,400 | 424,400 |

1006
EAST LONGMEADOW

**RECORD OF OWNERSHIP**

| | BK-VOL/PAGE | | SALE DATE | Q/U | V/I | SALE PRICE | VC |
|---|---|---|---|---|---|---|---|
| POLIMENI NICOLA | 23990 | 0067 | 07-09-2021 | U | I | 1 | 1A |
| POLIMENI NICOLA | 23947 | 0503 | 06-18-2021 | Q | I | 415,900 | 00 |
| GRAZIANI JEAN E | 23751 | 0508 | 03-09-2021 | U | I | 1 | 1A |
| GRAZIANI JEAN E LE | 19819 | 0339 | 05-14-2013 | U | I | 1 | 1A |
| GRAZIANI ALESSANDRO, | 19819 | 0337 | 05-14-2013 | U | I | 1 | 1A |

**PREVIOUS ASSESSMENTS (HISTORY)**

| Year | Code | Assessed | Year | Code | Assessed | Year | Code | Assessed |
|---|---|---|---|---|---|---|---|---|
| 2023 | 101 | 248,100 | 2022 | 101 | 223,800 | 2021 | 101 | 215,000 |
| | 101 | 128,600 | | 101 | 115,700 | | 101 | 107,100 |
| | 101 | 13,900 | | 101 | 13,900 | | 101 | 13,900 |
| | Total | 390,600 | | Total | 353,400 | | Total | 336,000 |

**EXEMPTIONS**

| Year | Code | Description | Amount |
|---|---|---|---|
| | | | |
| | | Total | |

**OTHER ASSESSMENTS**

| Code | Description | YEAR | Amount | Comm Int |
|---|---|---|---|---|
| | | | | |

This signature acknowledges a visit by a Data Collector or Assessor

**APPRAISED VALUE SUMMARY**

| | |
|---|---|
| Appraised BLDG. Value (Card) | 269,300 |
| Appraised Xf (B) Value (Bldg) | 0 |
| Appraised Ob (B) Value (Bldg) | 13,900 |
| Appraised Land Value (Bldg) | 141,200 |
| Special Land Value | 0 |
| Total Appraised Parcel Value | 424,400 |
| Valuation Method | C |
| Adjustment | |
| Net Total Appraised Parcel Value | 424,400 |

**ASSESSING NEIGHBORHOOD**

| Nbhd | Nbhd Name | | Tracing | Batch |
|---|---|---|---|---|
| 0001 | | | 101 | MG |

**NOTES**

**BUILDING PERMIT RECORD**

| Permit Id | Issue Date | Type | Description | Amount | Insp Date | % Comp | Date Comp | Comments |
|---|---|---|---|---|---|---|---|---|
| B-23-142 | 03-01-2023 | 91 | INSULATION | 2,000 | | 0 | | |
| 202201296 | 04-13-2022 | 91 | INSULATION | 1,352 | | 0 | | BP WITHDRAWN 8/ |
| 201601961 | 07-01-2016 | 91 | INSULATION | 4,638 | | 0 | | |
| 306 | 11-16-2001 | 12 | REROOF | 5,000 | | | | |

**VISIT / CHANGE HISTORY**

| Date | Type | Is | Id | Cd | Purpose/Result |
|---|---|---|---|---|---|
| 08-27-2019 | | | 334 | 3 | MEAS+INSPCTD |
| 11-18-2011 | | | 317 | 3 | MEAS+INSPCTD |
| 10-28-2011 | | | 317 | 2 | MEASURED |
| 09-18-2002 | | | 274 | 14 | INSPECTED |
| 09-09-2002 | | | 250 | 22 | MAILER SENT |
| 09-04-2002 | | | 274 | 2 | MEASURED |
| 02-26-2002 | | | 274 | 15 | PERMIT VISIT |

**LAND LINE VALUATION SECTION**

| B | Use Co | Description | Zone | D | Fronta | Depth | Land Units | | Unit Price | I. Fact | S.A. | Ac Di | C. Fact | St. Idx | Adj | Notes | Special Pricing | | | | Size A | Adj Unit Pric | Land Value |
|---|---|---|---|---|---|---|---|---|---|---|---|---|---|---|---|---|---|---|---|---|---|---|---|
| 1 | 101 | ONE FAM | RA | | | | 24,730 | SF | 4.76 | 1.200 | 7 | LAND | 1.00 | MG | 1.00 | | | 0 | | | 1.000 | 5.71 | 141,200 |
| Total Card Land Units | | | | | | | 0.57 | AC | Parcel Total Land Area: | | | 0.57 | | | | | | | | | | Total Land Value | 141,200 |

Property Location 65 RIDGE RD | Map ID 47/ 43/ 72/ / | Bldg Name | State Use 101
Vision ID 3739 | Account # 3803 | Bldg # 1 | Sec # 1 of 1 | Card # 1 of 1 | Print Date 11/14/2023 2:37:07 A

## CONSTRUCTION DETAIL

| Element | Cd | Description |
|---|---|---|
| Style | 19 | RANCH |
| Model | 01 | RESIDENTIAL |
| Grade | C+ | AVG. (+) |
| Stories | 1.00 | 1 STORY |
| Foundation | 1 | CONCRETE |
| Exterior Wall 1 | 1 | WOOD SHING |
| Exterior Wall 2 | 9 | STONE |
| Roof Structure | 1 | GABLE |
| Roof Cover | 1 | ASPHALT SH |
| Interior Wall 1 | 1 | DRYWALL |
| Interior Wall 2 | 8 | PLYWD PANL |
| Interior Floor 1 | 3 | HARDWOOD |
| Interior Floor 2 | 6 | CERAMIC TL |
| Heat Fuel | 2 | GAS |
| Heat Type | 3 | FORCED H/W |
| AC Type | 03 | FULL |
| Bedrooms | 3 | |
| Full Baths | 2 | |
| Half Baths | 1 | |
| Extra Fixtures | 0 | |
| Total Rooms | 7 | |
| Bath Style | A | AVERAGE |
| Half Bath Style | A | AVERAGE |
| Kitchens | 1 | |
| Kitchen Style | A | AVERAGE |
| Extra Kitchens | 0 | |
| Extra Kitchen St | | |
| FBM Sqft | 1644 | |
| FBM Quality | 3 | |
| Fireplaces | 2 | |
| WS Flues | | |
| Central Vac | 1 | YES |
| Frame | 1 | WOOD |

## CONSTRUCTION DETAIL (CONTINUED)

| Element | Cd | Description |
|---|---|---|
| Basement Floor | 4 | CARPET |
| Bsmt Garage | | |
| #Heat Sys | 1.00 | |
| Units | 1 | |

## MIXED USE

| Code | Description | Percentage |
|---|---|---|
| 101 | ONE FAM | 100 |
| | | 0 |
| | | 0 |

## COST / MARKET VALUATION

| | |
|---|---|
| Adj Base Rate | 111.89 |
| RCN | 427,472 |
| Net Other Adj | |
| Year Built | 1963 |
| Effective Year Built | 1984 |
| Depreciation Code | AG |
| Remodel Rating | |
| Year Remodeled | |
| Depreciation % | 37 |
| Functional Obsol | |
| External Obsol | |
| Cost Trend Factor | 1 |
| Condition | |
| % Complete | |
| Overall % Condition | 63 |
| RCNLD | 269,300 |
| Dep % Ovr | |
| Dep Ovr Comment | |
| Misc Imp Ovr | |
| Misc Imp Ovr Comment | |
| Cost to Cure Ovr | |
| Cost to Cure Ovr Comment | |

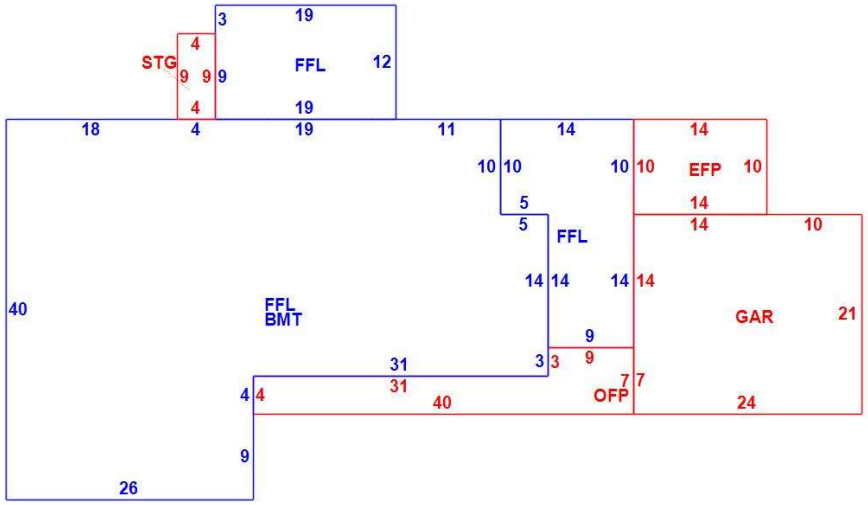

## OB - OUTBUILDING & YARD ITEMS(L) / XF - BUILDING EXTRA FEATURES(B)

| Code | Description | Su | Sub Type | Lan | Units | Unit Price | Yr Blt | % | Dep. | Cond | Gra | Qual | Apprais Va |
|---|---|---|---|---|---|---|---|---|---|---|---|---|---|
| 11 | POOL I-V | OB | Outbuildi | L | 800 | 29.00 | 1967 | 60 | 0.00 | AV | A | 1.00 | 13,900 |

## BUILDING SUB-AREA SUMMARY SECTION

| Subarea | Description | Living | Gross | Eff Area | Unit Cost | Undeprec Value |
|---|---|---|---|---|---|---|
| BMT | BASEMENT | 0 | 1,827 | | 28.55 | 52,166 |
| EFP | ENCL PORCH | 0 | 140 | | 71.46 | 10,004 |
| FFL | 1ST FLOOR | 2,321 | 2,321 | | 142.92 | 331,716 |
| GAR | GARAGE | 0 | 504 | | 57.28 | 28,870 |
| OFP | OPEN PORCH | 0 | 187 | | 14.52 | 2,715 |
| STG | STORAGE | 0 | 36 | | 55.58 | 2,001 |
| | Ttl Gross Liv / Lease Area | 2,321 | 5,015 | | | 427,472 |