Property Location 21 HERITAGE CR | Map ID 47/ 80/ 4/ / | Bldg Name | State Use 101
Vision ID 3780 | Account # 3845 | Bldg # 1 | Sec # 1 of 1 | Card # 1 of 1 | Print Date 11/14/2023 2:44:13 A

CURRENT OWNER	TOPO TYPE	UTILITY	STREET	LOCATION
COSTELLO ELIZABETH M TR				
	TOPO WET	EASEMENT	TRAFFIC	CORNER
21 HERITAGE CR				
	DRAINAGE		VIEW	COMMUNITY
EAST LONGMEADOW MA 01028				

SUPPLEMENTAL DATA

Alt Prcl ID	Received
SP Permit	NIA
Chapter Land	Field 8
OC Dates	Field 9
In+Ex FY	Field 10
Mailed	Assoc Pid#

GIS ID F_386625_2855005

CURRENT ASSESSMENT

Description	Code	Appraised	Assessed
RESIDNTL.	101	366900	366,900
RES LAND	101	147400	147,400
Total		514,300	514,300

1006

EAST LONGMEADOW

RECORD OF OWNERSHIP

	BK-VOL/PAGE		SALE DATE	Q/U	V/I	SALE PRICE	VC
COSTELLO ELIZABETH M TR	23424	0072	09-17-2020	U	I	1	1A
COSTELLO GERALD F JR	07912	0434	01-17-1992	U	I	129,900	1
PORTER HOMES INC	07912	0431	01-17-1992	U	I	1	1B
THE ALDER GROUP INC	00000	0000		U		0	

PREVIOUS ASSESSMENTS (HISTORY)

Year	Code	Assessed	Year	Code	Assessed	Year	Code	Assessed
2023	101	336,600	2022	101	304,100	2021	101	291,500
	101	134,100		101	136,400		101	126,000
	Total	470,700		Total	440,500		Total	417,500

EXEMPTIONS

Year	Code	Description	Amount
		Total	

OTHER ASSESSMENTS

Code	Description	YEAR	Amount	Comm Int

This signature acknowledges a visit by a Data Collector or Assessor

APPRAISED VALUE SUMMARY

Appraised BLDG. Value (Card)	366,900
Appraised Xf (B) Value (Bldg)	0
Appraised Ob (B) Value (Bldg)	0
Appraised Land Value (Bldg)	147,400
Special Land Value	0
Total Appraised Parcel Value	514,300
Valuation Method	C
Adjustment	
Net Total Appraised Parcel Value	514,300

ASSESSING NEIGHBORHOOD

Nbhd	Nbhd Name		Tracing	Batch
0001			101	NV

NOTES

BUILDING PERMIT RECORD

Permit Id	Issue Date	Type	Description	Amount	Insp Date	% Comp	Date Comp	Comments
B-23-540	07-27-2023	21	SIDING	29,150		0		
270	12-01-1990	MN	Manual Note	145,000				RES

VISIT / CHANGE HISTORY

Date	Type	Is	Id	Cd	Purpose/Result
07-19-2019			334	2	MEASURED
05-06-2011			317	3	MEAS+INSPCTD
09-20-2002			274	14	INSPECTED
09-12-2002			250	22	MAILER SENT
09-12-2002			274	2	MEASURED
06-10-1992			131	3	MEAS+INSPCTD
01-16-1991			105	15	PERMIT VISIT

LAND LINE VALUATION SECTION

B	Use Co	Description	Zone	D	Fronta	Depth	Land Units		Unit Price	I. Fact	S.A.	Ac Di	C. Fact	St. Idx	Adj	Notes	Special Pricing				Size A	Adj Unit Pric	Land Value
1	101	ONE FAM	RA				25,158	SF	4.69	1.250	9	LAND	1.00	NV	1.00			0			1.000	5.86	147,400
						Total Card Land Units	0.58	AC	Parcel Total Land Area:			0.58										Total Land Value	147,400

Property Location 21 HERITAGE CR | Map ID 47/ 80/ 4/ / | Bldg Name | State Use 101
Vision ID 3780 | Account # 3845 | Bldg # 1 | Sec # 1 of 1 | Card # 1 of 1 | Print Date 11/14/2023 2:44:14 A

CONSTRUCTION DETAIL

Element	Cd	Description
Style	06	COLONIAL
Model	01	RESIDENTIAL
Grade	B-	GOOD (-)
Stories	2.00	2 STORY
Foundation	1	CONCRETE
Exterior Wall 1	2	CLAPBOARD
Exterior Wall 2	8	BRICK VENR
Roof Structure	1	GABLE
Roof Cover	1	ASPHALT SH
Interior Wall 1	1	DRYWALL
Interior Wall 2		
Interior Floor 1	3	HARDWOOD
Interior Floor 2	4	CARPET
Heat Fuel	2	GAS
Heat Type	1	FORCED H/A
AC Type	03	FULL
Bedrooms	4	
Full Baths	3	
Half Baths	0	
Extra Fixtures	1	
Total Rooms	8	
Bath Style	G	GOOD
Half Bath Style		
Kitchens	1	
Kitchen Style	G	GOOD
Extra Kitchens	0	
Extra Kitchen St		
FBM Sqft		
FBM Quality		
Fireplaces	1	
WS Flues		
Central Vac	1	YES
Frame	1	WOOD

CONSTRUCTION DETAIL (CONTINUED)

Element	Cd	Description
Basement Floor	12	CONCRETE
Bsmt Garage		
#Heat Sys	2.00	
Units	1	

MIXED USE

Code	Description	Percentage
101	ONE FAM	100
		0
		0

COST / MARKET VALUATION

Adj Base Rate	110.53
RCN	447,437
Net Other Adj	
Year Built	1991
Effective Year Built	2003
Depreciation Code	GD
Remodel Rating	
Year Remodeled	
Depreciation %	18
Functional Obsol	
External Obsol	
Cost Trend Factor	1
Condition	
% Complete	
Overall % Condition	82
RCNLD	366,900
Dep % Ovr	
Dep Ovr Comment	
Misc Imp Ovr	
Misc Imp Ovr Comment	
Cost to Cure Ovr	
Cost to Cure Ovr Comment	

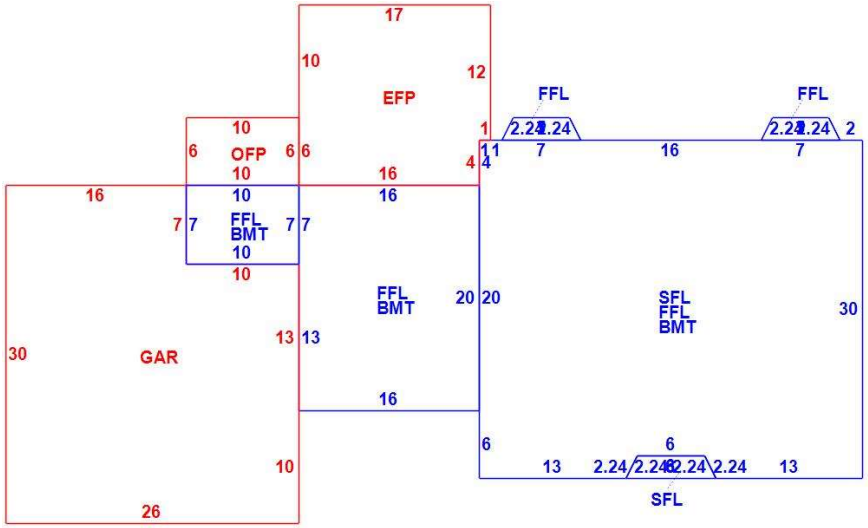

OB - OUTBUILDING & YARD ITEMS(L) / XF - BUILDING EXTRA FEATURES(B)

Code	Description	Su	Sub Type	Lan	Units	Unit Price	Yr Blt	%	Dep.	Cond	Gra	Qual	Apprais Va

BUILDING SUB-AREA SUMMARY SECTION

Subarea	Description	Living	Gross	Eff Area	Unit Cost	Undeprec Value
BMT	BASEMENT	0	1,396		28.45	39,718
EFP	ENCL PORCH	0	268		71.18	19,076
FFL	1ST FLOOR	1,420	1,420		142.36	202,151
GAR	GARAGE	0	710		56.94	40,430
OFP	OPEN PORCH	0	60		14.24	854
SFL	2ND FLOOR	1,020	1,020		142.36	145,207
	Ttl Gross Liv / Lease Area	2,440	4,874			447,437