Property Location 47 RURAL LN | Map ID 60/ 6/ 25/ / | Bldg Name | State Use 101
Vision ID 4694 | Account # 4767 | Bldg # 1 | Sec # 1 of 1 | Card # 1 of 1 | Print Date 11/14/2023 7:53:50 A

CURRENT OWNER	TOPO TYPE	UTILITY	STREET	LOCATION
JOHNSON BARBARA A				
	TOPO WET	EASEMENT	TRAFFIC	CORNER
47 RURAL LN				
	DRAINAGE		VIEW	COMMUNITY
EAST LONGMEADOW MA 01028				

GIS ID F_387567_2854087

SUPPLEMENTAL DATA

Alt Prcl ID	Received
SP Permit	NIA
Chapter Land	Field 8
OC Dates	Field 9
In+Ex FY	Field 10
Mailed	Assoc Pid#

CURRENT ASSESSMENT

Description	Code	Appraised	Assessed
RESIDNTL.	101	207500	207,500
RES LAND	101	146000	146,000
Total		353,500	353,500

1006

EAST LONGMEADOW

RECORD OF OWNERSHIP

	BK-VOL/PAGE		SALE DATE	Q/U	V/I	SALE PRICE	VC
JOHNSON BARBARA A	13296	0364	06-18-2003	U	I	172,500	
BRACKEN EDWARD J TRUSTEE OF,	07892	0545	12-24-1991	U	I	1	1A
BRACKEN DELLA I	05457	0498	06-29-1983	U	I	0	1A

PREVIOUS ASSESSMENTS (HISTORY)

Year	Code	Assessed	Year	Code	Assessed	Year	Code	Assessed
2023	101	190,000	2022	101	169,800	2021	101	162,600
	101	131,400		101	118,300		101	109,800
	Total	321,400		Total	288,100		Total	272,400

EXEMPTIONS

Year	Code	Description	Amount
		Total	

OTHER ASSESSMENTS

Code	Description	YEAR	Amount	Comm Int

This signature acknowledges a visit by a Data Collector or Assessor

APPRAISED VALUE SUMMARY

Appraised BLDG. Value (Card)	207,500
Appraised Xf (B) Value (Bldg)	0
Appraised Ob (B) Value (Bldg)	0
Appraised Land Value (Bldg)	146,000
Special Land Value	0
Total Appraised Parcel Value	353,500
Valuation Method	C
Adjustment	
Net Total Appraised Parcel Value	353,500

ASSESSING NEIGHBORHOOD

Nbhd	Nbhd Name		Tracing	Batch
0001			101	MG

NOTES

BUILDING PERMIT RECORD

Permit Id	Issue Date	Type	Description	Amount	Insp Date	% Comp	Date Comp	Comments
202201841	05-24-2022	62	SOLAR	39,000	05-23-2023	100	07-26-2022	
134	04-26-2006	4	ADDITION	10,000				10.5` X12.5" SUN R
155	05-24-2005	4	ADDITION	60,000				SEE NOTES

VISIT / CHANGE HISTORY

Date	Type	Is	Id	Cd	Purpose/Result
06-25-2018			333	2	MEASURED
02-23-2007			311	2	MEASURED
01-30-2006			311	15	PERMIT VISIT
01-30-2006			311	3	MEAS+INSPCTD
10-29-2001			247	3	MEAS+INSPCTD
03-05-1992			170	3	MEAS+INSPCTD
01-26-1981			500	3	MEAS+INSPCTD

LAND LINE VALUATION SECTION

B	Use Co	Description	Zone	D	Fronta	Depth	Land Units		Unit Price	I. Fact	S.A.	Ac Di	C. Fact	St. Idx	Adj	Notes	Special Pricing				Size A	Adj Unit Pric	Land Value
1	101	ONE FAM	RA				30,345	SF	4.01	1.200	7	LAND	1.00	MG	1.00			0			1.000	4.81	146,000
						Total Card Land Units	0.70	AC	Parcel Total Land Area:			0.70										Total Land Value	146,000

Property Location 47 RURAL LN | Map ID 60/ 6/ 25/ / | Bldg Name | State Use 101
Vision ID 4694 | Account # 4767 | Bldg # 1 | Sec # 1 of 1 | Card # 1 of 1 | Print Date 11/14/2023 7:53:51 A

CONSTRUCTION DETAIL

Element	Cd	Description
Style	19	RANCH
Model	01	RESIDENTIAL
Grade	C	AVERAGE
Stories	1.00	1 STORY
Foundation	1	CONCRETE
Exterior Wall 1	4	VINYL
Exterior Wall 2		
Roof Structure	1	GABLE
Roof Cover	1	ASPHALT SH
Interior Wall 1	2	PLASTER
Interior Wall 2		
Interior Floor 1	4	CARPET
Interior Floor 2	3	HARDWOOD
Heat Fuel	1	OIL
Heat Type	3	FORCED H/W
AC Type	03	FULL
Bedrooms	4	
Full Baths	2	
Half Baths	0	
Extra Fixtures	0	
Total Rooms	8	
Bath Style	A	AVERAGE
Half Bath Style	N	NONE
Kitchens	1	
Kitchen Style	A	AVERAGE
Extra Kitchens	0	
Extra Kitchen St	N	NONE
FBM Sqft		
FBM Quality		
Fireplaces	1	
WS Flues	0	
Central Vac	0	NO
Frame	1	WOOD

CONSTRUCTION DETAIL (CONTINUED)

Element	Cd	Description
Basement Floor	12	CONCRETE
Bsmt Garage	0	
#Heat Sys	1.00	
Units	1	

MIXED USE

Code	Description	Percentage
101	ONE FAM	100
		0
		0

COST / MARKET VALUATION

Adj Base Rate	116.14
RCN	329,342
Net Other Adj	
Year Built	1957
Effective Year Built	1984
Depreciation Code	AG
Remodel Rating	
Year Remodeled	
Depreciation %	37
Functional Obsol	
External Obsol	
Cost Trend Factor	1
Condition	
% Complete	
Overall % Condition	63
RCNLD	207,500
Dep % Ovr	
Dep Ovr Comment	
Misc Imp Ovr	
Misc Imp Ovr Comment	
Cost to Cure Ovr	
Cost to Cure Ovr Comment	

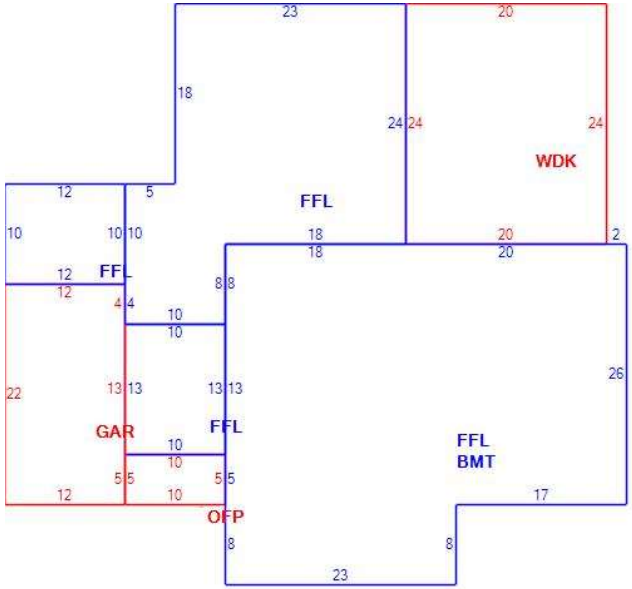

OB - OUTBUILDING & YARD ITEMS(L) / XF - BUILDING EXTRA FEATURES(B)

Code	Description	Su	Sub Type	Lan	Units	Unit Price	Yr Blt	%	Dep.	Cond	Gra	Qual	Apprais Va
SOL	Solar Panels	EX	Extra Fea	B	1	0.00	2022	63	1.00	AV	A	0.00	0

BUILDING SUB-AREA SUMMARY SECTION

Subarea	Description	Living	Gross	Eff Area	Unit Cost	Undeprec Value
BMT	BASEMENT	0	1,224		25.47	31,178
FFL	1ST FLOOR	2,136	2,136		127.26	271,822
GAR	GARAGE	0	264		51.10	13,489
OFP	OPEN PORCH	0	50		12.73	636
WDK	WOOD DECK	0	480		25.45	12,217
	Ttl Gross Liv / Lease Area	2,136	4,154			329,342