Property Location 125 FERNWOOD DR | Map ID 62/ 58/ 30/ / | Bldg Name | State Use 101
Vision ID 4821 | Account # 4895 | Bldg # 1 | Sec # 1 of 1 | Card # 1 of 1 | Print Date 11/14/2023 8:20:24 A

CURRENT OWNER	TOPO TYPE	UTILITY	STREET	LOCATION
DOBEK ROBERT W				
DOBEK MARILYN P	TOPO WET	EASEMENT	TRAFFIC	CORNER
125 FERNWOOD DR	DRAINAGE		VIEW	COMMUNITY
EAST LONGMEADOW MA 01028				

SUPPLEMENTAL DATA

Alt Prcl ID	Received
SP Permit	NIA
Chapter Land	Field 8
OC Dates	Field 9
In+Ex FY	Field 10
Mailed	Assoc Pid#

GIS ID F_389376_2850635

CURRENT ASSESSMENT

Description	Code	Appraised	Assessed
RESIDNTL.	101	201700	201,700
RES LAND	101	151700	151,700
Total		353,400	353,400

1006

EAST LONGMEADOW

RECORD OF OWNERSHIP

	BK-VOL/PAGE		SALE DATE	Q/U	V/I	SALE PRICE	VC
DOBEK ROBERT W	03903	0180	01-04-1974	U	I	0	

PREVIOUS ASSESSMENTS (HISTORY)

Year	Code	Assessed	Year	Code	Assessed	Year	Code	Assessed
2023	101	185,100	2022	101	166,200	2021	101	159,300
	101	138,500		101	124,900		101	115,700
	Total	323,600		Total	291,100		Total	275,000

EXEMPTIONS

Year	Code	Description	Amount
		Total	

OTHER ASSESSMENTS

Code	Description	YEAR	Amount	Comm Int

This signature acknowledges a visit by a Data Collector or Assessor

ASSESSING NEIGHBORHOOD

Nbhd	Nbhd Name		Tracing	Batch
0001			101	MG

NOTES

APPRAISED VALUE SUMMARY

Appraised BLDG. Value (Card)	201,700
Appraised Xf (B) Value (Bldg)	0
Appraised Ob (B) Value (Bldg)	0
Appraised Land Value (Bldg)	151,700
Special Land Value	0
Total Appraised Parcel Value	353,400
Valuation Method	C
Adjustment	
Net Total Appraised Parcel Value	353,400

BUILDING PERMIT RECORD

Permit Id	Issue Date	Type	Description	Amount	Insp Date	% Comp	Date Comp	Comments
152	05-01-1988	MN	Manual Note	7,000				FAM ROOM

VISIT / CHANGE HISTORY

Date	Type	Is	Id	Cd	Purpose/Result
06-27-2018			333	3	MEAS+INSPCTD
11-09-2007			317	14	INSPECTED
11-02-2007			317	2	MEASURED
07-11-2002			317	2	MEASURED
05-18-2000			247	14	INSPECTED
05-10-2000			247	2	MEASURED
03-20-1992			170	3	MEAS+INSPCTD

LAND LINE VALUATION SECTION

B	Use Co	Description	Zone	D	Fronta	Depth	Land Units		Unit Price	I. Fact	S.A.	Ac Di	C. Fact	St. Idx	Adj	Notes	Special Pricing				Size A	Adj Unit Pric	Land Value
1	101	ONE FAM	RA				40,000	SF	3.12	1.200	7	LAND	1.00	MG	1.00			0			1.000	3.74	149,600
1	101	ONE FAM	RA				0.300	AC	7,000.00	1.000	0		1.00	MG	1.00			0			1.000	7,000	2,100
						Total Card Land Units	1.22	AC	Parcel Total Land Area:	1.22												Total Land Value	151,700

Property Location 125 FERNWOOD DR | Map ID 62/ 58/ 30/ / | Bldg Name | State Use 101
Vision ID 4821 | Account # 4895 | Bldg # 1 | Sec # 1 of 1 | Card # 1 of 1 | Print Date 11/14/2023 8:20:25 A

CONSTRUCTION DETAIL

Element	Cd	Description
Style	19	RANCH
Model	01	RESIDENTIAL
Grade	C+	AVG. (+)
Stories	1.00	1 STORY
Foundation	1	CONCRETE
Exterior Wall 1	1	WOOD SHING
Exterior Wall 2		
Roof Structure	1	GABLE
Roof Cover	1	ASPHALT SH
Interior Wall 1	2	PLASTER
Interior Wall 2		
Interior Floor 1	3	HARDWOOD
Interior Floor 2	4	CARPET
Heat Fuel	1	OIL
Heat Type	1	FORCED H/A
AC Type	01	NONE
Bedrooms	4	
Full Baths	1	
Half Baths	1	
Extra Fixtures	0	
Total Rooms	7	
Bath Style	A	AVERAGE
Half Bath Style	A	AVERAGE
Kitchens	1	
Kitchen Style	A	AVERAGE
Extra Kitchens	0	
Extra Kitchen St		
FBM Sqft	672	
FBM Quality	1	
Fireplaces	2	
WS Flues		
Central Vac	0	NO
Frame	1	WOOD

CONSTRUCTION DETAIL (CONTINUED)

Element	Cd	Description
Basement Floor	12	CONCRETE
Bsmt Garage		
#Heat Sys	1.00	
Units	1	

MIXED USE

Code	Description	Percentage
101	ONE FAM	100
		0
		0

COST / MARKET VALUATION

Adj Base Rate	122.84
RCN	320,221
Net Other Adj	
Year Built	1959
Effective Year Built	1984
Depreciation Code	AG
Remodel Rating	
Year Remodeled	
Depreciation %	37
Functional Obsol	
External Obsol	
Cost Trend Factor	1
Condition	
% Complete	
Overall % Condition	63
RCNLD	201,700
Dep % Ovr	
Dep Ovr Comment	
Misc Imp Ovr	
Misc Imp Ovr Comment	
Cost to Cure Ovr	
Cost to Cure Ovr Comment	

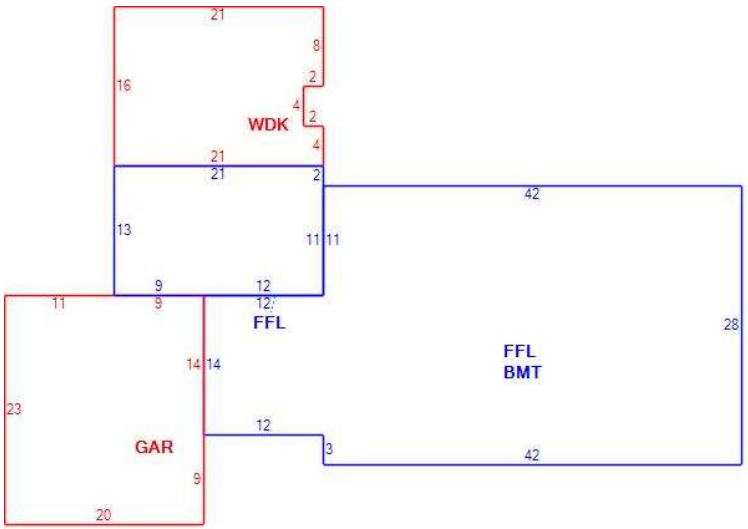

OB - OUTBUILDING & YARD ITEMS(L) / XF - BUILDING EXTRA FEATURES(B)

Code	Description	Su	Sub Type	Lan	Units	Unit Price	Yr Blt	%	Dep.	Cond	Gra	Qual	Apprais Va

BUILDING SUB-AREA SUMMARY SECTION

Subarea	Description	Living	Gross	Eff Area	Unit Cost	Undeprec Value
BMT	BASEMENT	0	1,344		30.01	40,327
FFL	1ST FLOOR	1,617	1,617		149.92	242,414
GAR	GARAGE	0	460		59.97	27,585
WDK	WOOD DECK	0	328		30.17	9,894
	Ttl Gross Liv / Lease Area	1,617	3,749			320,221