Property Location 69 MILLBROOK DR | Map ID 87/ 16/ 21/ / | Bldg Name | State Use 101
Vision ID 5834 | Account # 5916 | Bldg # 1 | Sec # 1 of 1 | Card # 1 of 1 | Print Date 11/14/2023 11:15:56 A

CURRENT OWNER	TOPO TYPE	UTILITY	STREET	LOCATION
PLUMB RICHARD D				
	TOPO WET	EASEMENT	TRAFFIC	CORNER
69 MILLBROOK DR				
	DRAINAGE		VIEW	COMMUNITY
EAST LONGMEADOW MA 01028				

SUPPLEMENTAL DATA	
Alt Prcl ID	Received
SP Permit	NIA
Chapter Land	Field 8
OC Dates	Field 9
In+Ex FY	Field 10
Mailed	Assoc Pid#

GIS ID F_393332_2852720

1006

EAST LONGMEADOW

CURRENT ASSESSMENT

Description	Code	Appraised	Assessed
RESIDNTL.	101	212700	212,700
RES LAND	101	117800	117,800
RESIDNTL.	101	67300	67,300
Total		397,800	397,800

RECORD OF OWNERSHIP

	BK-VOL/PAGE		SALE DATE	Q/U	V/I	SALE PRICE	VC
PLUMB RICHARD D	10056	0227	11-03-1997	U	I	1	1A
PLUMB RICHARD D +	08007	0031	04-10-1992	U	I	1	1A
PLUMB RICHARD D +	07136	0450	04-07-1989	U	I	130,000	
NOEL CLEMENT A	03103	0431	04-08-1965	U	I	0	

PREVIOUS ASSESSMENTS (HISTORY)

Year	Code	Assessed	Year	Code	Assessed	Year	Code	Assessed
2023	101	195,000	2022	101	173,500	2021	101	166,200
	101	107,200		101	97,400		101	90,100
	101	60,900		101	60,900		101	60,900
	Total	363,100		Total	331,800		Total	317,200

EXEMPTIONS

Year	Code	Description	Amount
		Total	

OTHER ASSESSMENTS

Code	Description	YEAR	Amount	Comm Int

This signature acknowledges a visit by a Data Collector or Assessor

ASSESSING NEIGHBORHOOD

Nbhd	Nbhd Name		Tracing	Batch
0001			101	MA

NOTES

APPRAISED VALUE SUMMARY

Appraised BLDG. Value (Card)	212,700
Appraised Xf (B) Value (Bldg)	0
Appraised Ob (B) Value (Bldg)	67,300
Appraised Land Value (Bldg)	117,800
Special Land Value	0
Total Appraised Parcel Value	397,800
Valuation Method	C
Adjustment	
Net Total Appraised Parcel Value	397,800

BUILDING PERMIT RECORD

Permit Id	Issue Date	Type	Description	Amount	Insp Date	% Comp	Date Comp	Comments
201803843	10-31-2018	21	SIDING	8,000	06-13-2019	100	06-13-2019	GARAGE
201502913	11-30-2015	21	SIDING	12,000	06-17-2016	100	06-17-2016	
201502682	10-01-2015	62	SOLAR	49,020	06-17-2016	100	06-17-2016	
201502624	09-30-2015	12	REROOF	7,500	06-17-2016	100	06-17-2016	GARAGE
201301370	04-16-2013	12	REROOF	8,000				NVC
63	04-30-1997	MN	Manual Note	30,000				ADDITION
91	05-01-1991	MN	Manual Note	14,000				FGR

VISIT / CHANGE HISTORY

Date	Type	Is	Id	Cd	Purpose/Result
06-13-2019			400	15	PERMIT VISIT
06-17-2016			317	15	PERMIT VISIT
05-31-2013			317	15	PERMIT VISIT
08-18-2005			349	14	INSPECTED
08-04-2005			349	2	MEASURED
01-03-2000			250	22	MAILER SENT
12-06-1999			247	2	MEASURED

LAND LINE VALUATION SECTION

B	Use Co	Description	Zone	D	Fronta	Depth	Land Units		Unit Price	I. Fact	S.A.	Ac Di	C. Fact	St. Idx	Adj	Notes	Special Pricing				Size A	Adj Unit Pric	Land Value
1	101	ONE FAM	RA				25,176	SF	4.68	1.000	5	LAND	1.00	MA	1.00			0			1.000	4.68	117,800
						Total Card Land Units	0.58	AC	Parcel Total Land Area:	0.58												Total Land Value	117,800

Property Location 69 MILLBROOK DR | Map ID 87/ 16/ 21/ / | Bldg Name | State Use 101
Vision ID 5834 | Account # 5916 | Bldg # 1 | Sec # 1 of 1 | Card # 1 of 1 | Print Date 11/14/2023 11:15:57 A

CONSTRUCTION DETAIL

Element	Cd	Description
Style	19	RANCH
Model	01	RESIDENTIAL
Grade	C	AVERAGE
Stories	1.00	1 STORY
Foundation	1	CONCRETE
Exterior Wall 1	4	VINYL
Exterior Wall 2		
Roof Structure	1	GABLE
Roof Cover	1	ASPHALT SH
Interior Wall 1	2	PLASTER
Interior Wall 2		
Interior Floor 1	3	HARDWOOD
Interior Floor 2		
Heat Fuel	2	GAS
Heat Type	3	FORCED H/W
AC Type	03	FULL
Bedrooms	3	
Full Baths	2	
Half Baths	0	
Extra Fixtures	0	
Total Rooms	6	
Bath Style	G	GOOD
Half Bath Style		
Kitchens	1	
Kitchen Style	G	GOOD
Extra Kitchens	0	
Extra Kitchen St		
FBM Sqft		
FBM Quality		
Fireplaces	0	
WS Flues		
Central Vac	1	YES
Frame	1	WOOD

CONSTRUCTION DETAIL (CONTINUED)

Element	Cd	Description
Basement Floor	12	CONCRETE
Bsmt Garage		
#Heat Sys	1.00	
Units	1	

MIXED USE

Code	Description	Percentage
101	ONE FAM	100
		0
		0

COST / MARKET VALUATION

Adj Base Rate	120.26
RCN	303,853
Net Other Adj	
Year Built	1955
Effective Year Built	1991
Depreciation Code	GD
Remodel Rating	
Year Remodeled	
Depreciation %	30
Functional Obsol	
External Obsol	
Cost Trend Factor	1
Condition	
% Complete	
Overall % Condition	70
RCNLD	212,700
Dep % Ovr	
Dep Ovr Comment	
Misc Imp Ovr	
Misc Imp Ovr Comment	
Cost to Cure Ovr	
Cost to Cure Ovr Comment	

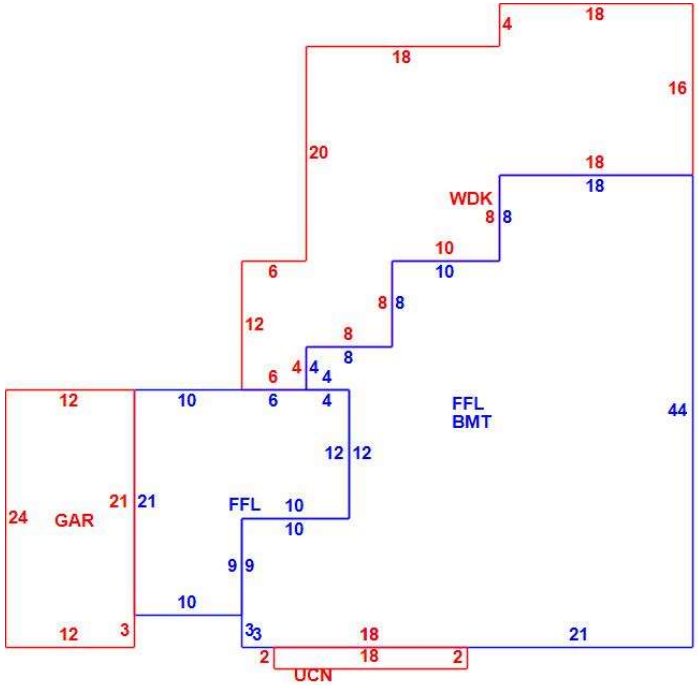

OB - OUTBUILDING & YARD ITEMS(L) / XF - BUILDING EXTRA FEATURES(B)

Code	Description	Su	Sub Type	Lan	Units	Unit Price	Yr Blt	%	Dep.	Cond	Gra	Qual	Apprais Va
03	GARAGE	OB	Outbuildi	L	864	32.00	1991	70	0.00	GD	A	1.00	19,400
02	SHED/FR			L	160	12.00	1997	70	0.00	GD	A	1.00	1,300
03	GARAGE	OB	Outbuildi	L	594	32.00	2000	70	0.00	GD	A	1.00	13,300
SOL	Solar Panels	EX	Extra Fea	B	1	0.00	1988	70	1.00			0.00	0
FINH	FINSHDwHE			L	864	55.00	1991	70	0.00	GD	A	1.00	33,300

BUILDING SUB-AREA SUMMARY SECTION

Subarea	Description	Living	Gross	Eff Area	Unit Cost	Undeprec Value
BMT	BASEMENT	0	1,400		26.61	37,250
FFL	1ST FLOOR	1,730	1,730		133.04	230,151
GAR	GARAGE	0	288		53.12	15,299
UCN	UNFIN CAN	0	36		7.39	266
WDK	WOOD DECK	0	784		26.64	20,887
	Ttl Gross Liv / Lease Area	1,730	4,238			303,853