Property Location 30 KENNETH LUNDEN DR | Map ID 90/ 2/ 42/ / | Bldg Name | State Use 101
Vision ID 6000 | Account # 6083 | Bldg # 1 | Sec # 1 of 1 | Card # 1 of 1 | Print Date 11/14/2023 11:45:41 A

| CURRENT OWNER | TOPO TYPE | UTILITY | STREET | LOCATION |
|---|---|---|---|---|
| MCFARLAND MELISSA R | | | | |
| MCFARLAND ZACHARY T | TOPO WET | EASEMENT | TRAFFIC | CORNER |
| 30 KENNETH LUNDEN DR | DRAINAGE | | VIEW | COMMUNITY |
| EAST LONGMEADOW MA 01028 | | | | |

**SUPPLEMENTAL DATA**

| | |
|---|---|
| Alt Prcl ID | Received |
| SP Permit | NIA |
| Chapter Land | Field 8 |
| OC Dates | Field 9 |
| In+Ex FY | Field 10 |
| Mailed | Assoc Pid# |

GIS ID F_392956_2847714

**CURRENT ASSESSMENT**

| Description | Code | Appraised | Assessed |
|---|---|---|---|
| RESIDNTL. | 101 | 284700 | 284,700 |
| RES LAND | 101 | 142600 | 142,600 |
| RESIDNTL. | 101 | 12800 | 12,800 |
| Total | | 440,100 | 440,100 |

1006
EAST LONGMEADOW

**RECORD OF OWNERSHIP**

| | BK-VOL/PAGE | | SALE DATE | Q/U | V/I | SALE PRICE | VC |
|---|---|---|---|---|---|---|---|
| MCFARLAND MELISSA R | 21308 | 0469 | 08-12-2016 | Q | I | 369,900 | 00 |
| QUINN JAMES M | 13294 | 0006 | 06-16-2003 | U | I | 298,000 | |
| ERICKSON PAUL D, | 05440 | 0127 | 05-24-1983 | U | I | 92,000 | |

**PREVIOUS ASSESSMENTS (HISTORY)**

| Year | Code | Assessed | Year | Code | Assessed | Year | Code | Assessed |
|---|---|---|---|---|---|---|---|---|
| 2023 | 101 | 261,800 | 2022 | 101 | 234,200 | 2021 | 101 | 224,900 |
| | 101 | 129,000 | | 101 | 116,400 | | 101 | 107,800 |
| | 101 | 12,200 | | 101 | 12,200 | | 101 | 12,200 |
| | Total | 403,000 | | Total | 362,800 | | Total | 344,900 |

**EXEMPTIONS**

| Year | Code | Description | Amount |
|---|---|---|---|
| | | | |
| | | Total | |

**OTHER ASSESSMENTS**

| Code | Description | YEAR | Amount | Comm Int |
|---|---|---|---|---|
| | | | | |

This signature acknowledges a visit by a Data Collector or Assessor

**ASSESSING NEIGHBORHOOD**

| Nbhd | Nbhd Name | | Tracing | Batch |
|---|---|---|---|---|
| 0001 | | | 101 | MG |

**NOTES**

**APPRAISED VALUE SUMMARY**

| | |
|---|---|
| Appraised BLDG. Value (Card) | 284,700 |
| Appraised Xf (B) Value (Bldg) | 0 |
| Appraised Ob (B) Value (Bldg) | 12,800 |
| Appraised Land Value (Bldg) | 142,600 |
| Special Land Value | 0 |
| Total Appraised Parcel Value | 440,100 |
| Valuation Method | C |
| Adjustment | |
| Net Total Appraised Parcel Value | 440,100 |

**BUILDING PERMIT RECORD**

| Permit Id | Issue Date | Type | Description | Amount | Insp Date | % Comp | Date Comp | Comments |
|---|---|---|---|---|---|---|---|---|
| 201702363 | 08-31-2017 | 21 | SIDING | 25,900 | 05-23-2018 | 100 | 05-23-2018 | INCLUDES FRONT |
| 201701862 | 06-27-2017 | 91 | INSULATION | 2,800 | | 100 | | |
| 156 | 06-02-2010 | 7 | REMODEL | 60,000 | | | | KITCHEN |
| 27 | 02-03-2010 | 7 | REMODEL | 10,000 | | | | FINISH BMT W/BAT |
| 202 | 07-09-2007 | 12 | REROOF | 5,800 | | | | |
| 212 | 07-22-2004 | 17 | DECK | 8,600 | | | | |
| 131 | 01-01-1983 | MN | Manual Note | | | | | POOL |

**VISIT / CHANGE HISTORY**

| Date | Type | Is | Id | Cd | Purpose/Result |
|---|---|---|---|---|---|
| 05-23-2018 | | | 400 | 15 | PERMIT VISIT |
| 01-19-2017 | | | 317 | 16 | FIELDREV CHG |
| 01-21-2011 | | | 317 | 15 | PERMIT VISIT |
| 01-21-2011 | | | 317 | 15 | PERMIT VISIT |
| 12-28-2007 | | | 317 | 15 | PERMIT VISIT |
| 07-02-2005 | | | 274 | 3 | MEAS+INSPCTD |
| 01-19-2005 | | | 311 | 15 | PERMIT VISIT |

**LAND LINE VALUATION SECTION**

| B | Use Co | Description | Zone | D | Fronta | Depth | Land Units | | Unit Price | I. Fact | S.A. | Ac Di | C. Fact | St. Idx | Adj | Notes | Special Pricing | | | | Size A | Adj Unit Pric | Land Value |
|---|---|---|---|---|---|---|---|---|---|---|---|---|---|---|---|---|---|---|---|---|---|---|---|
| 1 | 101 | ONE FAM | RA | | | | 26,159 | SF | 4.54 | 1.200 | 7 | LAND | 1.00 | MG | 1.00 | | | 0 | | | 1.000 | 5.45 | 142,600 |
| | | | | | | Total Card Land Units | 0.60 | AC | Parcel Total Land Area: | | | 0.60 | | | | | | | | | | Total Land Value | 142,600 |

Property Location 30 KENNETH LUNDEN DR | Map ID 90/ 2/ 42/ / | Bldg Name | State Use 101
Vision ID 6000 | Account # 6083 | Bldg # 1 | Sec # 1 of 1 | Card # 1 of 1 | Print Date 11/14/2023 11:45:42 A

## CONSTRUCTION DETAIL

| Element | Cd | Description |
|---|---|---|
| Style | 06 | COLONIAL |
| Model | 01 | RESIDENTIAL |
| Grade | B- | GOOD (-) |
| Stories | 2.00 | 2 STORY |
| Foundation | 1 | CONCRETE |
| Exterior Wall 1 | 4 | VINYL |
| Exterior Wall 2 | | |
| Roof Structure | 1 | GABLE |
| Roof Cover | 1 | ASPHALT SH |
| Interior Wall 1 | 1 | DRYWALL |
| Interior Wall 2 | | |
| Interior Floor 1 | 3 | HARDWOOD |
| Interior Floor 2 | | |
| Heat Fuel | 2 | GAS |
| Heat Type | 3 | FORCED H/W |
| AC Type | 01 | NONE |
| Bedrooms | 4 | |
| Full Baths | 3 | |
| Half Baths | 1 | |
| Extra Fixtures | 1 | |
| Total Rooms | 8 | |
| Bath Style | A | AVERAGE |
| Half Bath Style | A | AVERAGE |
| Kitchens | 1 | |
| Kitchen Style | G | GOOD |
| Extra Kitchens | 0 | |
| Extra Kitchen St | | |
| FBM Sqft | 662 | |
| FBM Quality | 3 | |
| Fireplaces | 1 | |
| WS Flues | | |
| Central Vac | 0 | NO |
| Frame | 1 | WOOD |

## CONSTRUCTION DETAIL (CONTINUED)

| Element | Cd | Description |
|---|---|---|
| Basement Floor | 4 | CARPET |
| Bsmt Garage | | |
| #Heat Sys | 1.00 | |
| Units | 1 | |

## MIXED USE

| Code | Description | Percentage |
|---|---|---|
| 101 | ONE FAM | 100 |
| | | 0 |
| | | 0 |

## COST / MARKET VALUATION

| | |
|---|---|
| Adj Base Rate | 114.98 |
| RCN | 406,715 |
| Net Other Adj | |
| Year Built | 1965 |
| Effective Year Built | 1991 |
| Depreciation Code | GD |
| Remodel Rating | |
| Year Remodeled | |
| Depreciation % | 30 |
| Functional Obsol | |
| External Obsol | |
| Cost Trend Factor | 1 |
| Condition | |
| % Complete | |
| Overall % Condition | 70 |
| RCNLD | 284,700 |
| Dep % Ovr | |
| Dep Ovr Comment | |
| Misc Imp Ovr | |
| Misc Imp Ovr Comment | |
| Cost to Cure Ovr | |
| Cost to Cure Ovr Comment | |

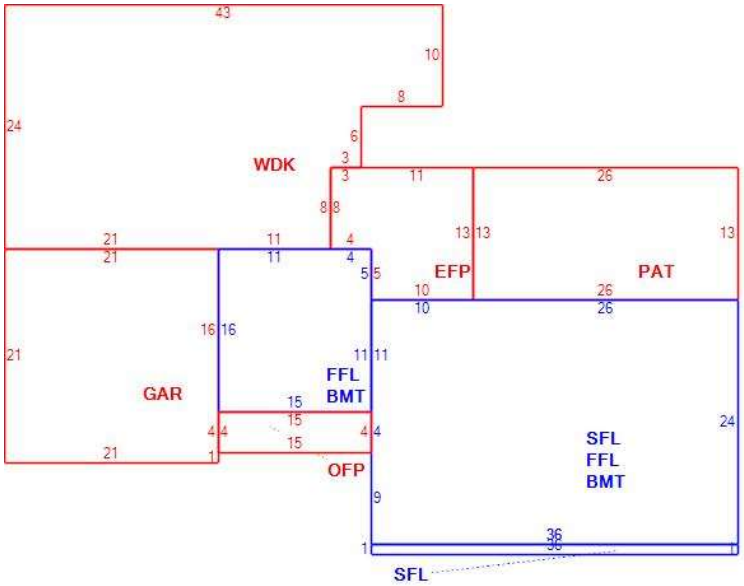


## OB - OUTBUILDING & YARD ITEMS(L) / XF - BUILDING EXTRA FEATURES(B)

| Code | Description | Su | Sub Type | Lan | Units | Unit Price | Yr Blt | % | Dep. | Cond | Gra | Qual | Apprais Va |
|---|---|---|---|---|---|---|---|---|---|---|---|---|---|
| 02 | SHED/FR | | | L | 48 | 12.00 | 1970 | 60 | 0.00 | AV | A | 1.00 | 300 |
| 02 | SHED/FR | | | L | 160 | 12.00 | 1970 | 60 | 0.00 | AV | A | 1.00 | 1,200 |
| 11 | POOL I-V | OB | Outbuildi | L | 648 | 29.00 | 1983 | 60 | 0.00 | AV | A | 1.00 | 11,300 |

## BUILDING SUB-AREA SUMMARY SECTION

| Subarea | Description | Living | Gross | Eff Area | Unit Cost | Undeprec Value |
|---|---|---|---|---|---|---|
| BMT | BASEMENT | 0 | 1,104 | | 30.33 | 33,489 |
| EFP | ENCL PORCH | 0 | 162 | | 75.77 | 12,274 |
| FFL | 1ST FLOOR | 1,104 | 1,104 | | 151.53 | 167,293 |
| GAR | GARAGE | 0 | 441 | | 60.48 | 26,670 |
| OFP | OPEN PORCH | 0 | 60 | | 15.15 | 909 |
| PAT | PATIO | 0 | 338 | | 7.62 | 2,576 |
| SFL | 2ND FLOOR | 900 | 900 | | 151.53 | 136,380 |
| WDK | WOOD DECK | 0 | 896 | | 30.27 | 27,124 |
| | Ttl Gross Liv / Lease Area | 2,004 | 5,005 | | | 406,715 |