Property Location 51 FORBES HILL RD | Map ID 95/ 46A/ 0/ / | Bldg Name | State Use 101
Vision ID 6159 | Account # 6242 | Bldg # 1 | Sec # 1 of 1 | Card # 1 of 1 | Print Date 11/14/2023 12:12:30

CURRENT OWNER	TOPO TYPE	UTILITY	STREET	LOCATION
CHRISTENSEN DONALD I				
	TOPO WET	EASEMENT	TRAFFIC	CORNER
51 FORBES HILL RD				
	DRAINAGE		VIEW	COMMUNITY
EAST LONGMEADOW MA 01028				

GIS ID F_393998_2840229

SUPPLEMENTAL DATA

Alt Prcl ID	Received
SP Permit	NIA
Chapter Land	Field 8
OC Dates	Field 9
In+Ex FY	Field 10
Mailed	Assoc Pid#

CURRENT ASSESSMENT

Description	Code	Appraised	Assessed
RESIDNTL.	101	171100	171,100
RES LAND	101	145000	145,000
Total		316,100	316,100

1006

EAST LONGMEADOW

RECORD OF OWNERSHIP

	BK-VOL/PAGE		SALE DATE	Q/U	V/I	SALE PRICE	VC
CHRISTENSEN DONALD I	02673	0411	05-04-1959	U	I	0	

PREVIOUS ASSESSMENTS (HISTORY)

Year	Code	Assessed	Year	Code	Assessed	Year	Code	Assessed
2023	101	156,300	2022	101	140,300	2021	101	134,100
	101	130,700		101	118,000		101	108,900
	Total	287,000		Total	258,300		Total	243,000

EXEMPTIONS

Year	Code	Description	Amount
		Total	

OTHER ASSESSMENTS

Code	Description	YEAR	Amount	Comm Int

This signature acknowledges a visit by a Data Collector or Assessor

ASSESSING NEIGHBORHOOD

Nbhd	Nbhd Name		Tracing	Batch
0001			101	MG

NOTES

APPRAISED VALUE SUMMARY

Appraised BLDG. Value (Card)	171,100
Appraised Xf (B) Value (Bldg)	0
Appraised Ob (B) Value (Bldg)	0
Appraised Land Value (Bldg)	145,000
Special Land Value	0
Total Appraised Parcel Value	316,100
Valuation Method	C
Adjustment	
Net Total Appraised Parcel Value	316,100

BUILDING PERMIT RECORD

Permit Id	Issue Date	Type	Description	Amount	Insp Date	% Comp	Date Comp	Comments

VISIT / CHANGE HISTORY

Date	Type	Is	Id	Cd	Purpose/Result
04-25-2018			333	3	MEAS+INSPCTD
06-14-2005			274	3	MEAS+INSPCTD
02-22-2000			247	14	INSPECTED
11-22-1999			247	2	MEASURED
10-28-1991			181	3	MEAS+INSPCTD
10-22-1980			500	3	MEAS+INSPCTD

LAND LINE VALUATION SECTION

B	Use Co	Description	Zone	D	Fronta	Depth	Land Units		Unit Price	I. Fact	S.A.	Ac Di	C. Fact	St. Idx	Adj	Notes	Special Pricing				Size A	Adj Unit Pric	Land Value
1	101	ONE FAM	RA				29,361	SF	4.12	1.200	7	LAND	1.00	MG	1.00			0			1.000	4.94	145,000
						Total Card Land Units	0.67	AC	Parcel Total Land Area:			0.67										Total Land Value	145,000

Property Location 51 FORBES HILL RD | Map ID 95/ 46A/ 0/ / | Bldg Name | State Use 101
Vision ID 6159 | Account # 6242 | Bldg # 1 | Sec # 1 of 1 | Card # 1 of 1 | Print Date 11/14/2023 12:12:31

CONSTRUCTION DETAIL

Element	Cd	Description
Style	05	CAPE
Model	01	RESIDENTIAL
Grade	C	AVERAGE
Stories	1.75	1 3/4 STORIES
Foundation	1	CONCRETE
Exterior Wall 1	1	WOOD SHING
Exterior Wall 2		
Roof Structure	1	GABLE
Roof Cover	1	ASPHALT SH
Interior Wall 1	1	DRYWALL
Interior Wall 2		
Interior Floor 1	3	HARDWOOD
Interior Floor 2	5	LINO/VINYL
Heat Fuel	1	OIL
Heat Type	1	FORCED H/A
AC Type	01	NONE
Bedrooms	4	
Full Baths	1	
Half Baths	1	
Extra Fixtures	0	
Total Rooms	7	
Bath Style	A	AVERAGE
Half Bath Style	A	AVERAGE
Kitchens	1	
Kitchen Style	A	AVERAGE
Extra Kitchens	0	
Extra Kitchen St		
FBM Sqft		
FBM Quality		
Fireplaces	0	
WS Flues		
Central Vac	0	NO
Frame	1	WOOD

CONSTRUCTION DETAIL (CONTINUED)

Element	Cd	Description
Basement Floor	12	CONCRETE
Bsmt Garage		
#Heat Sys	1.00	
Units	1	

MIXED USE

Code	Description	Percentage
101	ONE FAM	100
		0
		0

COST / MARKET VALUATION

Adj Base Rate	119.13
RCN	300,147
Net Other Adj	
Year Built	1961
Effective Year Built	1978
Depreciation Code	AV
Remodel Rating	
Year Remodeled	
Depreciation %	43
Functional Obsol	
External Obsol	
Cost Trend Factor	1
Condition	
% Complete	
Overall % Condition	57
RCNLD	171,100
Dep % Ovr	
Dep Ovr Comment	
Misc Imp Ovr	
Misc Imp Ovr Comment	
Cost to Cure Ovr	
Cost to Cure Ovr Comment	

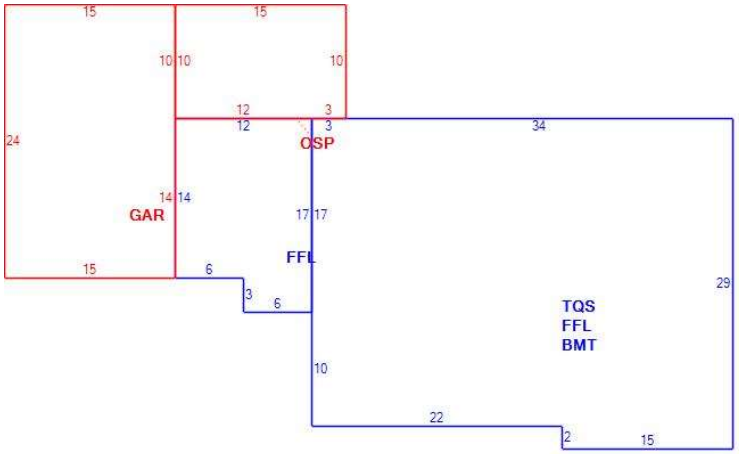

OB - OUTBUILDING & YARD ITEMS(L) / XF - BUILDING EXTRA FEATURES(B)

Code	Description	Su	Sub Type	Lan	Units	Unit Price	Yr Blt	%	Dep.	Cond	Gra	Qual	Apprais Va

BUILDING SUB-AREA SUMMARY SECTION

Subarea	Description	Living	Gross	Eff Area	Unit Cost	Undeprec Value
BMT	BASEMENT	0	1,029		25.46	26,199
FFL	1ST FLOOR	1,215	1,215		127.18	154,525
GAR	GARAGE	0	360		50.87	18,314
OSP	SCRN PORCH	0	150		19.50	2,925
TQS	3/4 STORY	772	1,029		95.42	98,184
	Ttl Gross Liv / Lease Area	1,987	3,783			300,147