Property Location 115 PINEHURST DR | Map ID 80/ 1/ 115/ / | Bldg Name | State Use 102
Vision ID 6193 | Account # 6277 | Bldg # 1 | Sec # 1 of 1 | Card # 1 of 1 | Print Date 11/14/2023 12:17:53

| CURRENT OWNER | TOPO | UTILITIES | STRT / ROAD | LOCATION |
|---|---|---|---|---|
| DEWRANCE JOANN S TR | | | | |
| 115 PINEHURST DR | | | | |
| EAST LONGMEADOW MA 01028 | | | | |

**SUPPLEMENTAL DATA**

| | | | |
|---|---|---|---|
| Alt Prcl ID | | Received | |
| SP Permit | | NIA | |
| Chapter La | | Field 8 | |
| OC Dates | | Field 9 | |
| In+Ex FY | | Field 10 | |
| Mailed | | | |
| GIS ID | F_392090_2841032 | Assoc Pid# | |

**CURRENT ASSESSMENT**

| Description | Code | Assessed | Assessed |
|---|---|---|---|
| RESIDNTL. | 102 | 434,400 | 434,400 |
| | Total | 434,400 | 434,400 |

1006
EAST LONGMEADOW, MA

**VISION**

**RECORD OF OWNERSHIP**

| | BK-VOL/PAGE | | SALE DATE | Q/U | V/I | SALE PRICE | VC |
|---|---|---|---|---|---|---|---|
| DEWRANCE JOANN S TR | 24799 | 0470 | 11-10-2022 | U | I | 1 | 1A |
| DEWRANCE DENNIS + JOANN S | 21066 | 0041 | 02-17-2016 | Q | I | 299,900 | 00 |
| GAUTHIER FRANCES | 19694 | 0193 | 02-20-2013 | U | I | 100 | 1A |
| GAUTHIER FRANCES, | 16421 | 0582 | 12-22-2006 | U | I | 340,000 | |
| MC CARTHY,JEAN M TRUSTEE OF THE | 14955 | 0228 | 04-20-2005 | U | I | 1 | 1F |

**PREVIOUS ASSESSMENTS (HISTORY)**

| Year | Code | Assessed | Year | Code | Assessed V | Year | Code | Assessed |
|---|---|---|---|---|---|---|---|---|
| 2023 | 102 | 384,800 | 2022 | 102 | 330,900 | 2021 | 102 | 322,100 |
| | Total | 384,800 | | Total | 330,900 | | Total | 322,100 |

**EXEMPTIONS**

| Year | Code | Description | Amount |
|---|---|---|---|
| | | Total | 0.00 |

**OTHER ASSESSMENTS**

| Code | Description | Number | Amount | Comm Int |
|---|---|---|---|---|
| | | | | |

This signature acknowledges a visit by a Data Collector or Assessor

**APPRAISED VALUE SUMMARY**

| | |
|---|---|
| Appraised Bldg. Value (Card) | 434,400 |
| Appraised Xf (B) Value (Bldg) | 0 |
| Appraised Ob (B) Value (Bldg) | 0 |
| Appraised Land Value (Bldg) | 0 |
| Special Land Value | 0 |
| Total Appraised Parcel Value | 434,400 |
| Valuation Method | C |
| Total Appraised Parcel Value | 434,400 |

**ASSESSING NEIGHBORHOOD**

| Nbhd | Nbhd Name | B | Tracing | Batch |
|---|---|---|---|---|
| 0001 | | | 102 | EL |

**NOTES**

BLDG #5 THE ELMS GARDEN UNIT

**BUILDING PERMIT RECORD**

| Permit Id | Issue Date | Type | Description | Amount | Insp Date | % Comp | Date Comp | Comments |
|---|---|---|---|---|---|---|---|---|
| 262 | 08-26-2008 | 7 | REMODEL | 9,640 | | | | ADDITIONAL BATH IN BMT |
| 113 | 06-08-1998 | 2 | DWELLING | 110,000 | | | | |

**VISIT / CHANGE HISTORY**

| Date | Id | Type | Is | Cd | Purpose/Result |
|---|---|---|---|---|---|
| 07-25-2022 | 400 | | | 3 | MEAS+INSPCTD |
| 01-26-2017 | 317 | | | 16 | FIELDREV CHG |
| 02-09-2010 | 316 | | | 14 | INSPECTED |
| 02-09-2010 | 316 | | | 15 | PERMIT VISIT |
| 02-09-2010 | 316 | | | 15 | PERMIT VISIT |
| 02-19-2009 | 317 | | | 15 | PERMIT VISIT |
| 11-03-2005 | 311 | | | 3 | MEAS+INSPCTD |

**LAND LINE VALUATION SECTION**

| B | Use Code | Description | Zone | Land Type | Land Units | | Unit Price | Size Adj | Site Index | Cond. | Nbhd. | Nbhd. Adj | Notes | Location Adjustment | | Adj Unit P | Land Value |
|---|---|---|---|---|---|---|---|---|---|---|---|---|---|---|---|---|---|
| 1 | 102 | CONDO | PUR | SITE | 0 | SF | 0.00 | 1.00000 | | 1.00 | EL | 1.000 | | | 0.0000 | 0 | 0 |
| | | | | Total Card Land Units | 0 | SF | Parcel Total Land Area | | | 0.00 | | | | | Total Land Value | | 0 |

Property Location 115 PINEHURST DR | Map ID 80/ 1/ 115/ / | Bldg Name | State Use 102
Vision ID 6193 | Account # 6277 | Bldg # 1 | Sec # 1 of 1 | Card # 1 of 1 | Print Date 11/14/2023 12:17:54

## CONSTRUCTION DETAIL

| Element | Cd | Description |
|---|---|---|
| Style | 07 | CONDO-GRDN |
| Model | 05 | RES CONDO |
| Grade | C+ | AVG. (+) |
| Stories | 1.00 | 1 STORY |
| Foundation | 1 | CONCRETE |
| Interior Wall 1 | 1 | DRYWALL |
| Interior Wall 2 | | |
| Interior Floor 1 | 4 | CARPET |
| Interior Floor 2 | 6 | CERAMIC TL |
| Heat Fuel | 2 | GAS |
| Heat Type | 1 | FORCED H/A |
| AC Type | 03 | FULL |
| Bedrooms | 2 | |
| Full Baths | 3 | |
| Half Baths | 0 | |
| Extra Fixtures | 0 | |
| Total Rooms | 4 | |
| Bath Style | G | GOOD |
| Half Baths | G | GOOD |
| Num Kitchens | 1 | |
| Kitchen Style | G | GOOD |
| FBM Sqft | 1361 | |
| FBM Quality | 5 | FLA VG |
| Fireplaces | 0 | |
| WS Flues | 0 | |
| Central Vac | | No |
| Frame | 1 | WOOD |
| Bsmt Floor | 12 | CONCRETE |
| Bsmt Garage | 0 | |
| #Heat Sys | 1 | |
| Occupancy | 1 | |
| Int Vs Ext | S | |

## CONSTRUCTION DETAIL (CONTINUED)

| Element | Cd | Description |
|---|---|---|
| | | |

## CONDO DATA

| | | | | | |
|---|---|---|---|---|---|
| Parcel Id | 6769 | C | 0020 | Owne | |
| | THE ELMS | B | 1 | S | 1 |

| Adjust Type | Code | Description | Factor% |
|---|---|---|---|
| Unit Type C | | | |
| Unit Locatio | E | END UNIT | |

## COST / MARKET VALUATION

| | |
|---|---|
| Adj Base Rate | 158.58 |
| Building Value New | 488,133 |
| Year Built | 1998 |
| Effective Year Built | 2010 |
| Depreciation Code | GD |
| Remodel Rating | |
| Year Remodeled | |
| Depreciation % | 11 |
| Functional Obsol | |
| External Obsol | |
| Trend Factor | 1 |
| Condition | |
| Condition % | |
| Percent Good | 89 |
| Cns Sect Rcnld | 434,400 |
| Dep % Ovr | |
| Dep Ovr Comment | |
| Misc Imp Ovr | |
| Misc Imp Ovr Comment | |
| Cost to Cure Ovr | |
| Cost to Cure Ovr Comment | |

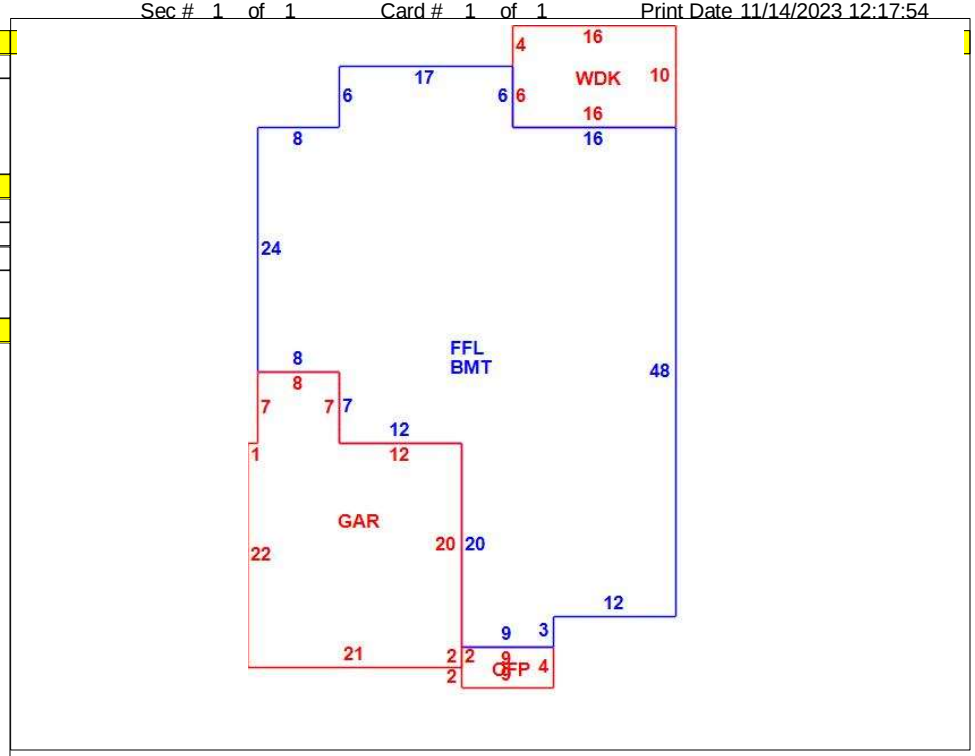


## OB - OUTBUILDING & YARD ITEMS(L) / XF - BUILDING EXTRA FEATURES(B)

| Code | Description | L/B | Units | Unit Price | Yr Blt | Cond. Cd | % Gd | Grade | Grade Adj. | Appr. Value |
|---|---|---|---|---|---|---|---|---|---|---|
| | | | | | | | | | | |

## BUILDING SUB-AREA SUMMARY SECTION

| Code | Description | Living Area | Floor Area | Eff Area | Unit Cost | Undeprec Value |
|---|---|---|---|---|---|---|
| BMT | BASEMENT | 0 | 1,701 | | 42.72 | 72,664 |
| FFL | 1ST FLOOR | 1,701 | 1,701 | | 213.72 | 363,535 |
| GAR | GARAGE | 0 | 518 | | 85.40 | 44,240 |
| OFP | OPEN PORCH | 0 | 36 | | 23.75 | 855 |
| WDK | WOOD DECK | 0 | 160 | | 42.74 | 6,839 |
| | Ttl Gross Liv / Lease Area | 1,701 | 4,116 | | | 488,133 |