Property Location 350 PINEHURST DR | Map ID 80/ 1/ 350/ / | Bldg Name | State Use 102
Vision ID 6395 | Account # 6493 | Bldg # 1 | Sec # 1 of 1 | Card # 1 of 1 | Print Date 11/14/2023 12:51:19

CURRENT OWNER	TOPO	UTILITIES	STRT / ROAD	LOCATION
ANDERSON DEBORAH S				
350 PINEHURST DR				
EAST LONGMEADOW MA 01028				

SUPPLEMENTAL DATA

Alt Prcl ID		Received	
SP Permit		NIA	
Chapter La		Field 8	
OC Dates	3/14/2002	Field 9	
In+Ex FY		Field 10	
Mailed			
GIS ID	F_392090_2841032	Assoc Pid#	

CURRENT ASSESSMENT

Description	Code	Assessed	Assessed
RESIDNTL.	102	584,600	584,600
	Total	584,600	584,600

1006
EAST LONGMEADOW, MA

VISION

RECORD OF OWNERSHIP

	BK-VOL/PAGE		SALE DATE	Q/U	V/I	SALE PRICE	VC
ANDERSON DEBORAH S	21382	0417	09-30-2016	Q	I	487,000	00
TAYLOR DEBRA ELAINE	16665	0293	05-02-2007	U	I	1	1A
PAGOS,JOSEPH P	12005	0113	11-30-2001	U	I	106,876	1B
ELMS RESIDENTIAL CONDOMIUMS	10338	0117	06-24-1998	U	V	1	1B
ROUTE 83 DEVELOPMENT	00000	0000		U		0	

PREVIOUS ASSESSMENTS (HISTORY)

Year	Code	Assessed	Year	Code	Assessed V	Year	Code	Assessed
2023	102	521,500	2022	102	492,400	2021	102	475,800
	Total	521,500		Total	492,400		Total	475,800

EXEMPTIONS

Year	Code	Description	Amount
		Total	0.00

OTHER ASSESSMENTS

Code	Description	Number	Amount	Comm Int

This signature acknowledges a visit by a Data Collector or Assessor

ASSESSING NEIGHBORHOOD

Nbhd	Nbhd Name	B	Tracing	Batch
0001			102	EL

NOTES

APPRAISED VALUE SUMMARY

Appraised Bldg. Value (Card)	584,600
Appraised Xf (B) Value (Bldg)	0
Appraised Ob (B) Value (Bldg)	0
Appraised Land Value (Bldg)	0
Special Land Value	0
Total Appraised Parcel Value	584,600
Valuation Method	C
Total Appraised Parcel Value	584,600

BUILDING PERMIT RECORD

Permit Id	Issue Date	Type	Description	Amount	Insp Date	% Comp	Date Comp	Comments
78	04-27-2004	7	REMODEL	9,000		0		FIN BMT
116	05-22-2001	2	DWELLING	200,000		0		SINGLE GARDEN UNIT OC 3/

VISIT / CHANGE HISTORY

Date	Id	Type	Is	Cd	Purpose/Result
07-25-2022	400			3	MEAS+INSPCTD
01-26-2017	317			16	FIELDREV CHG
12-15-2016	317			3	MEAS+INSPCTD
02-01-2006	311			15	PERMIT VISIT
01-14-2005	311			15	PERMIT VISIT
03-15-2002	105			14	INSPECTED
01-07-2002	105			7	INFO FM PLAN

LAND LINE VALUATION SECTION

B	Use Code	Description	Zone	Land Type	Land Units		Unit Price	Size Adj	Site Index	Cond.	Nbhd.	Nbhd. Adj	Notes	Location Adjustment		Adj Unit P	Land Value
1	102	CONDO	PUR	SITE	0	SF	0.00	1.00000		1.00	EL	1.000			0.0000	0	0
				Total Card Land Units	0	SF	Parcel Total Land Area			0.00					Total Land Value		0

Property Location 350 PINEHURST DR | Map ID 80/ 1/ 350/ / | Bldg Name | State Use 102
Vision ID 6395 | Account # 6493 | Bldg # 1 | Sec # 1 of 1 | Card # 1 of 1 | Print Date 11/14/2023 12:51:19

CONSTRUCTION DETAIL

Element	Cd	Description
Style	08	CONDO-TNHS
Model	05	RES CONDO
Grade	B+	GOOD (+)
Stories	2.00	2 STORY
Foundation	1	CONCRETE
Interior Wall 1	1	DRYWALL
Interior Wall 2		
Interior Floor 1	4	CARPET
Interior Floor 2	3	HARDWOOD
Heat Fuel	2	GAS
Heat Type	1	FORCED H/A
AC Type	03	FULL
Bedrooms	2	
Full Baths	3	
Half Baths	1	
Extra Fixtures	1	
Total Rooms	4	
Bath Style	G	GOOD
Half Baths	G	GOOD
Num Kitchens	1	
Kitchen Style	G	GOOD
FBM Sqft	800	
FBM Quality	5	FLA VG
Fireplaces	1	
WS Flues	0	
Central Vac		Yes
Frame	1	WOOD
Bsmt Floor	12	CONCRETE
Bsmt Garage	0	
#Heat Sys	1	
Occupancy	1	
Int Vs Ext	S	

CONSTRUCTION DETAIL (CONTINUED)

Element	Cd	Description

CONDO DATA

Parcel Id	6769	C	0020	Owne	
	THE ELMS	B	1	S	1

Adjust Type	Code	Description	Factor%
Unit Type C			
Unit Locatio	D	DETACHED	

COST / MARKET VALUATION

Adj Base Rate	156.17
Building Value New	649,551
Year Built	2001
Effective Year Built	2011
Depreciation Code	GD
Remodel Rating	
Year Remodeled	
Depreciation %	10
Functional Obsol	
External Obsol	
Trend Factor	1
Condition	
Condition %	
Percent Good	90
Cns Sect Rcnld	584,600
Dep % Ovr	
Dep Ovr Comment	
Misc Imp Ovr	
Misc Imp Ovr Comment	
Cost to Cure Ovr	
Cost to Cure Ovr Comment	

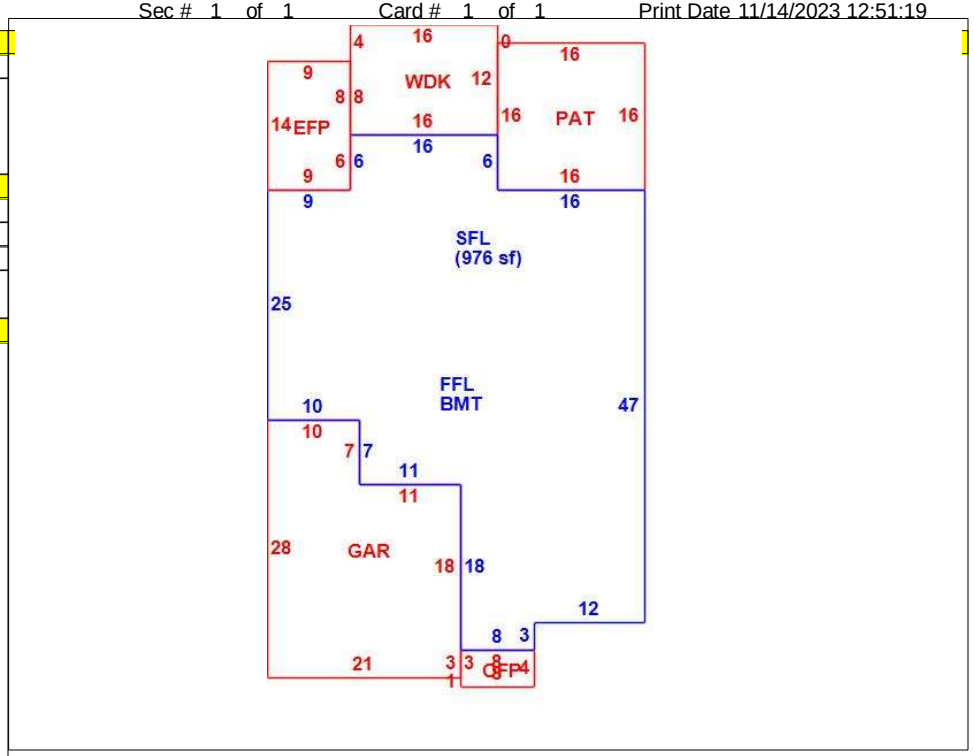

OB - OUTBUILDING & YARD ITEMS(L) / XF - BUILDING EXTRA FEATURES(B)

Code	Description	L/B	Units	Unit Price	Yr Blt	Cond. Cd	% Gd	Grade	Grade Adj.	Appr. Value

BUILDING SUB-AREA SUMMARY SECTION

Code	Description	Living Area	Floor Area	Eff Area	Unit Cost	Undeprec Value
BMT	BASEMENT	0	1,662		39.43	65,527
EFP	ENCL PORCH	0	126		98.69	12,434
FFL	1ST FLOOR	1,662	1,662		197.37	328,032
GAR	GARAGE	0	511		78.79	40,264
OFP	OPEN PORCH	0	32		18.50	592
PAT	PATIO	0	256		10.02	2,566
SFL	2ND FLOOR	976	976		197.37	192,635
WDK	WOOD DECK	0	192		39.06	7,500
	Ttl Gross Liv / Lease Area	2,638	5,417			649,550