Property Location 52 LORI LN | Map ID 7/ 86/ 5/ / | Bldg Name | State Use 101
Vision ID 6679 | Account # 6793 | Bldg # 1 | Sec # 1 of 1 | Card # 1 of 1 | Print Date 11/14/2023 1:40:12 P

CURRENT OWNER	TOPO TYPE	UTILITY	STREET	LOCATION
CHEUNG CHARLES				
KWOK TAK KIT	TOPO WET	EASEMENT	TRAFFIC	CORNER
52 LORI LN	DRAINAGE		VIEW	COMMUNITY
EAST LONGMEADOW MA 01028				

SUPPLEMENTAL DATA	
Alt Prcl ID	Received
SP Permit	NIA
Chapter Land	Field 8
OC Dates	Field 9
In+Ex FY	Field 10
Mailed	Assoc Pid#

GIS ID F_377594_2847087

CURRENT ASSESSMENT

Description	Code	Appraised	Assessed
RESIDNTL.	101	489700	489,700
RES LAND	101	114900	114,900
Total		604,600	604,600

1006

EAST LONGMEADOW

RECORD OF OWNERSHIP

RECORD OF OWNERSHIP	BK-VOL/PAGE		SALE DATE	Q/U	V/I	SALE PRICE	VC
CHEUNG CHARLES	20409	0056	08-29-2014	U	I	100	1A
CHEUNG YUK FAN	17540	0514	11-07-2008	U	I	435,000	
QUINN,KEVIN T	16463	0592	01-22-2007	U	I	481,000	
HASLEY,JOHN	15007	0512	05-06-2005	U	I	270,000	1
CHALMERS ENTERPRISES LLC,	00000	0000		U		0	

PREVIOUS ASSESSMENTS (HISTORY)

Year	Code	Assessed	Year	Code	Assessed	Year	Code	Assessed
2023	101	455,100	2022	101	416,300	2021	101	399,500
	101	104,500		101	94,900		101	87,900
	Total	559,600		Total	511,200		Total	487,400

EXEMPTIONS

Year	Code	Description	Amount
		Total	

OTHER ASSESSMENTS

Code	Description	YEAR	Amount	Comm Int

This signature acknowledges a visit by a Data Collector or Assessor

ASSESSING NEIGHBORHOOD

Nbhd	Nbhd Name		Tracing	Batch
0001			101	MA

NOTES

SUB DIV 975-SUB DIV 998

APPRAISED VALUE SUMMARY

Appraised BLDG. Value (Card)	489,700
Appraised Xf (B) Value (Bldg)	0
Appraised Ob (B) Value (Bldg)	0
Appraised Land Value (Bldg)	114,900
Special Land Value	0
Total Appraised Parcel Value	604,600
Valuation Method	C
Adjustment	
Net Total Appraised Parcel Value	604,600

BUILDING PERMIT RECORD

Permit Id	Issue Date	Type	Description	Amount	Insp Date	% Comp	Date Comp	Comments
334	10-01-2006	2	DWELLING	250,000				OC 1/27/2007

VISIT / CHANGE HISTORY

Date	Type	Is	Id	Cd	Purpose/Result
07-30-2019			334	2	MEASURED
10-07-2011			317	3	MEAS+INSPCTD
12-12-2008			317	14	INSPECTED
01-24-2008			250	22	MAILER SENT
01-18-2008			317	15	PERMIT VISIT
01-18-2008			317	15	PERMIT VISIT
03-16-2007			311	15	PERMIT VISIT

LAND LINE VALUATION SECTION

B	Use Co	Description	Zone	D	Fronta	Depth	Land Units		Unit Price	I. Fact	S.A.	Ac Di	C. Fact	St. Idx	Adj	Notes	Special Pricing				Size A	Adj Unit Pric	Land Value
1	101	ONE FAM	RB				18,466	SF	6.22	1.000	5	LAND	1.00	MA	1.00			0			1.000	6.22	114,900
Total Card Land Units							0.42	AC	Parcel Total Land Area:			0.42									Total Land Value		114,900

Property Location 52 LORI LN | Map ID 7/ 86/ 5/ / | Bldg Name | State Use 101
Vision ID 6679 | Account # 6793 | Bldg # 1 | Sec # 1 of 1 | Card # 1 of 1 | Print Date 11/14/2023 1:40:13 P

CONSTRUCTION DETAIL

Element	Cd	Description
Style	06	COLONIAL
Model	01	RESIDENTIAL
Grade	B	GOOD
Stories	2.00	2 STORY
Foundation	1	CONCRETE
Exterior Wall 1	4	VINYL
Exterior Wall 2		
Roof Structure	2	HIP
Roof Cover	1	ASPHALT SH
Interior Wall 1	1	DRYWALL
Interior Wall 2		
Interior Floor 1	3	HARDWOOD
Interior Floor 2	4	CARPET
Heat Fuel	2	GAS
Heat Type	1	FORCED H/A
AC Type	03	FULL
Bedrooms	3	
Full Baths	3	
Half Baths	1	
Extra Fixtures	0	
Total Rooms	7	
Bath Style	G	GOOD
Half Bath Style	G	GOOD
Kitchens	1	
Kitchen Style	G	GOOD
Extra Kitchens	0	
Extra Kitchen St		
FBM Sqft	843	
FBM Quality	3	
Fireplaces	1	
WS Flues		
Central Vac	1	YES
Frame	1	WOOD

CONSTRUCTION DETAIL (CONTINUED)

Element	Cd	Description
Basement Floor	12	CONCRETE
Bsmt Garage		
#Heat Sys	1.00	
Units	1	

MIXED USE

Code	Description	Percentage
101	ONE FAM	100
		0
		0

COST / MARKET VALUATION

Adj Base Rate	94.06
RCN	544,098
Net Other Adj	
Year Built	2006
Effective Year Built	2011
Depreciation Code	GD
Remodel Rating	
Year Remodeled	
Depreciation %	10
Functional Obsol	
External Obsol	
Cost Trend Factor	1
Condition	
% Complete	
Overall % Condition	90
RCNLD	489,700
Dep % Ovr	
Dep Ovr Comment	
Misc Imp Ovr	
Misc Imp Ovr Comment	
Cost to Cure Ovr	
Cost to Cure Ovr Comment	

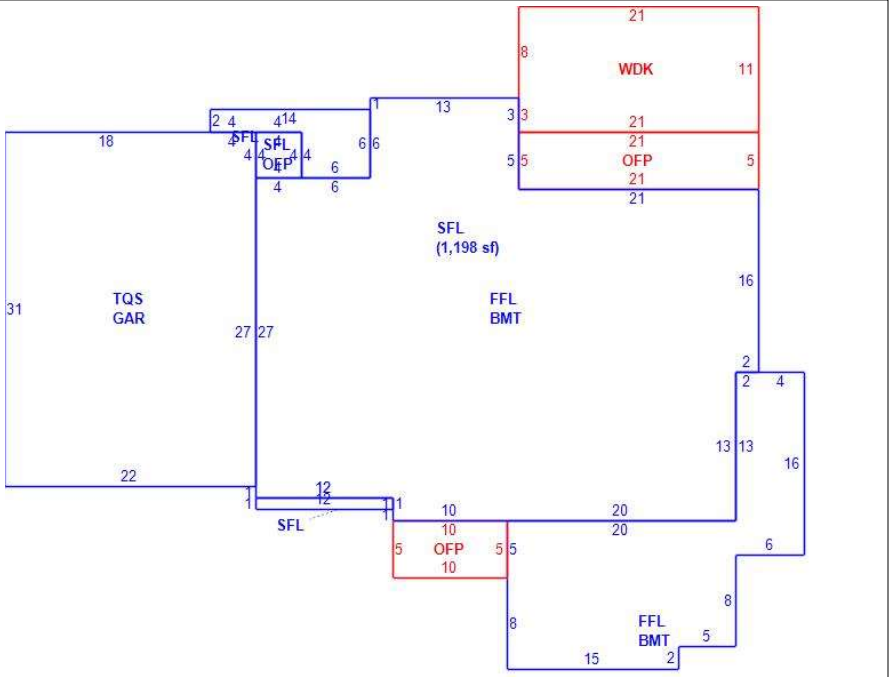

OB - OUTBUILDING & YARD ITEMS(L) / XF - BUILDING EXTRA FEATURES(B)

Code	Description	Su	Sub Type	Lan	Units	Unit Price	Yr Blt	%	Dep.	Cond	Gra	Qual	Apprais Va

BUILDING SUB-AREA SUMMARY SECTION

Subarea	Description	Living	Gross	Eff Area	Unit Cost	Undeprec Value
BMT	BASEMENT	0	1,686		26.21	44,194
FFL	1ST FLOOR	1,686	1,686		131.14	221,101
GAR	GARAGE	0	682		52.49	35,801
OFP	OPEN PORCH	0	171		13.04	2,229
SFL	2ND FLOOR	1,278	1,278		131.14	167,596
TQS	3/4 STORY	512	682		98.45	67,143
WDK	WOOD DECK	0	231		26.11	6,032
	Ttl Gross Liv / Lease Area	3,476	6,416			544,098