Property Location 10 BELLA VISTA DR | Map ID 44/ 10/ 23/ / | Bldg Name | State Use 101
Vision ID 6829 | Account # 6950 | Bldg # 1 | Sec # 1 of 1 | Card # 1 of 1 | Print Date 11/14/2023 2:05:22 P

CURRENT OWNER	TOPO TYPE	UTILITY	STREET	LOCATION
GERNUX THOMAS J JR TR				
GERNUX CAROLYN G TR	TOPO WET	EASEMENT	TRAFFIC	CORNER
10 BELLA VISTA DR	DRAINAGE		VIEW	COMMUNITY
EAST LONGMEADOW MA 01028				

GIS ID F_384227_2841055

SUPPLEMENTAL DATA

Alt Prcl ID		Received	
SP Permit		NIA	
Chapter Land		Field 8	
OC Dates	6/29/20	Field 9	
In+Ex FY		Field 10	
Mailed		Assoc Pid#	

CURRENT ASSESSMENT

Description	Code	Appraised	Assessed
RESIDNTL.	101	565500	565,500
RES LAND	101	194000	194,000
RESIDNTL.	101	3000	3,000
Total		762,500	762,500

1006

EAST LONGMEADOW

RECORD OF OWNERSHIP

	BK-VOL/PAGE		SALE DATE	Q/U	V/I	SALE PRICE	VC
GERNUX THOMAS J JR TR	25208	0091	10-27-2023	U	I	100	1A
GERNUX THOMAS J JR	23294	0145	07-02-2020	Q	I	585,864	00
AC HOMEBUILDING LLC	22985	0386	12-05-2019	U	V	100	1B
FITZGERALD BRIAN S TR	22546	0521	02-05-2019	U	V	702,500	1V
BELLA VISTA LAND HOLDINGS LLC	18724	0379	04-01-2011	U	V	1	1V

PREVIOUS ASSESSMENTS (HISTORY)

Year	Code	Assessed	Year	Code	Assessed	Year	Code	Assessed
2023	101	494,600	2022	101	441,400	2021	101	422,800
	101	176,400		101	181,200		101	167,600
	101	1,900		101	1,900			
	Total	672,900		Total	624,500		Total	590,400

EXEMPTIONS

Year	Code	Description	Amount
		Total	

OTHER ASSESSMENTS

Code	Description	YEAR	Amount	Comm Int

This signature acknowledges a visit by a Data Collector or Assessor

APPRAISED VALUE SUMMARY

Appraised BLDG. Value (Card)	565,500
Appraised Xf (B) Value (Bldg)	0
Appraised Ob (B) Value (Bldg)	3,000
Appraised Land Value (Bldg)	194,000
Special Land Value	0
Total Appraised Parcel Value	762,500
Valuation Method	C
Adjustment	
Net Total Appraised Parcel Value	762,500

ASSESSING NEIGHBORHOOD

Nbhd	Nbhd Name		Tracing	Batch
0001			131	NV

NOTES

NEW-FY2013 SUB 1087 B361 P51

BUILDING PERMIT RECORD

Permit Id	Issue Date	Type	Description	Amount	Insp Date	% Comp	Date Comp	Comments
202103086	10-26-2021	4	ADDITION	30,000	07-03-2023	100	07-03-2023	REPLC DECK WITH
202002904	11-02-2020	10	SHED	13,500	07-16-2021	100	07-16-2021	12X24
201903091	11-01-2019	2	DWELLING	450,000	06-30-2020	100	06-29-2020	NEW SINGLE FAMIL

VISIT / CHANGE HISTORY

Date	Type	Is	Id	Cd	Purpose/Result
07-03-2023			334	15	PERMIT VISIT
06-17-2022		1	334	15	PERMIT VISIT
07-16-2021			334	15	PERMIT VISIT
07-07-2020			334	15	PERMIT VISIT
06-30-2020			400	25	OC VISIT

LAND LINE VALUATION SECTION

B	Use Co	Description	Zone	D	Fronta	Depth	Land Units		Unit Price	I. Fact	S.A.	Ac Di	C. Fact	St. Idx	Adj	Notes	Special Pricing				Size A	Adj Unit Pric	Land Value
1	101	ONE FAM	RAA				40,000	SF	3.12	1.550	2	LAND	1.00	NS	1.00			0			1.000	4.84	193,600
1	101	ONE FAM	RAA				0.060	AC	7,000.00	1.000	0		1.00	NS	1.00			0			1.000	7,000	400
						Total Card Land Units	0.98	AC	Parcel Total Land Area:			0.98										Total Land Value	194,000

Property Location 10 BELLA VISTA DR | Map ID 44/ 10/ 23/ / | Bldg Name | State Use 101
Vision ID 6829 | Account # 6950 | Bldg # 1 | Sec # 1 of 1 | Card # 1 of 1 | Print Date 11/14/2023 2:05:23 P

CONSTRUCTION DETAIL

Element	Cd	Description
Style	19	RANCH
Model	01	RESIDENTIAL
Grade	A-	V GOOD-
Stories	1.00	1 STORY
Foundation	1	CONCRETE
Exterior Wall 1	4	VINYL
Exterior Wall 2	16	STONE VENR
Roof Structure	2	HIP
Roof Cover	1	ASPHALT SH
Interior Wall 1	1	DRYWALL
Interior Wall 2		
Interior Floor 1	3	HARDWOOD
Interior Floor 2	6	CERAMIC TL
Heat Fuel	2	GAS
Heat Type	1	FORCED H/A
AC Type	03	FULL
Bedrooms	3	
Full Baths	2	
Half Baths	0	
Extra Fixtures	2	
Total Rooms	8	
Bath Style	G	GOOD
Half Bath Style	N	NONE
Kitchens	1	
Kitchen Style	G	GOOD
Extra Kitchens	0	
Extra Kitchen St	N	NONE
FBM Sqft		
FBM Quality		
Fireplaces	1	
WS Flues	0	
Central Vac	0	NO
Frame	1	WOOD

CONSTRUCTION DETAIL (CONTINUED)

Element	Cd	Description
Basement Floor	12	CONCRETE
Bsmt Garage	0	
#Heat Sys	1.00	
Units	1	

MIXED USE

Code	Description	Percentage
101	ONE FAM	100
		0
		0

COST / MARKET VALUATION

Adj Base Rate	107.56
RCN	577,037
Net Other Adj	
Year Built	2019
Effective Year Built	2019
Depreciation Code	GD
Remodel Rating	
Year Remodeled	
Depreciation %	2
Functional Obsol	
External Obsol	
Cost Trend Factor	1
Condition	
% Complete	
Overall % Condition	98
RCNLD	565,500
Dep % Ovr	
Dep Ovr Comment	
Misc Imp Ovr	
Misc Imp Ovr Comment	
Cost to Cure Ovr	
Cost to Cure Ovr Comment	

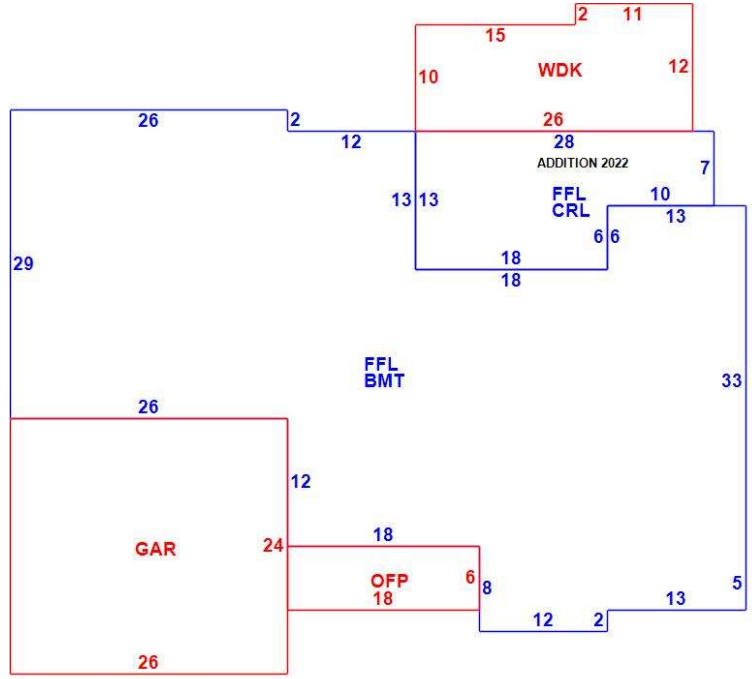

OB - OUTBUILDING & YARD ITEMS(L) / XF - BUILDING EXTRA FEATURES(B)

Code	Description	Su	Sub Type	Lan	Units	Unit Price	Yr Blt	%	Dep.	Cond	Gra	Qual	Apprais Va
02	SHED/FR			L	288	12.00	2021	70	0.00	GD	G	1.25	3,000

BUILDING SUB-AREA SUMMARY SECTION

Subarea	Description	Living	Gross	Eff Area	Unit Cost	Undeprec Value
BMT	BASEMENT	0	2,280		34.23	78,033
CRL	CRAWL	0	304		8.44	2,567
FFL	1ST FLOOR	2,584	2,584		171.13	442,190
GAR	GARAGE	0	624		68.56	42,782
OFP	OPEN PORCH	0	108		17.43	1,882
WDK	WOOD DECK	0	282		33.98	9,583
	Ttl Gross Liv / Lease Area	2,584	6,182			577,037