Property Location 45 TAYLOR ST | Map ID 26/ 118/ 9+10/ / | Bldg Name | State Use 101
Vision ID 1730 | Account # 1766 | Bldg # 1 | Sec # 1 of 1 | Card # 1 of 1 | Print Date 11/20/2024 12:02:34

CURRENT OWNER	TOPO TYPE	UTILITY	STREET	LOCATION
DELISLE GARY M				
DELISLE DAPHINE A	TOPO WET	EASEMENT	TRAFFIC	CORNER
45 TAYLOR ST	DRAINAGE		VIEW	COMMUNITY
EAST LONGMEADOW MA 01028				

SUPPLEMENTAL DATA

Alt Prcl ID	Received
SP Permit	NIA
Chapter Land	Field 8
OC Dates	Field 9
In+Ex FY	Field 10
Mailed	Assoc Pid#

GIS ID F_381668_2851058

CURRENT ASSESSMENT

Description	Code	Appraised	Assessed
RESIDNTL.	101	238300	238,300
RES LAND	101	114100	114,100
RESIDNTL.	101	900	900
Total		353,300	353,300

1006
EAST LONGMEADOW

RECORD OF OWNERSHIP

	BK-VOL/PAGE		SALE DATE	Q/U	V/I	SALE PRICE	VC
DELISLE GARY M	07734	0511	06-21-1991	U	I	1	1A
DELISLE GARY M + DAPHNIE	06125	0081	06-20-1986	U	I	98,900	
STANTON	05141	0097	07-24-1981	U	I	0	

PREVIOUS ASSESSMENTS (HISTORY)

Year	Code	Assessed	Year	Code	Assessed	Year	Code	Assessed
2024	101	220,600	2023	101	202,900	2022	101	183,700
	101	114,100		101	103,700		101	94,200
	101	900		101	500		101	500
	Total	335,600		Total	307,100		Total	278,400

EXEMPTIONS

Year	Code	Description	Amount
		Total	

OTHER ASSESSMENTS

Code	Description	YEAR	Amount	Comm Int

This signature acknowledges a visit by a Data Collector or Assessor

ASSESSING NEIGHBORHOOD

Nbhd	Nbhd Name		Tracing	Batch
0001			101	MA

NOTES

APPRAISED VALUE SUMMARY

Appraised BLDG. Value (Card)	238,300
Appraised Xf (B) Value (Bldg)	0
Appraised Ob (B) Value (Bldg)	900
Appraised Land Value (Bldg)	114,100
Special Land Value	0
Total Appraised Parcel Value	353,300
Valuation Method	C
Adjustment	
Net Total Appraised Parcel Value	353,300

BUILDING PERMIT RECORD

Permit Id	Issue Date	Type	Description	Amount	Insp Date	% Comp	Date Comp	Comments
201502929	11-19-2015	42	REPAIRS	40,000	05-06-2016	0		RENOVATE BATH D
201500330	02-11-2015	91	INSULATION	600		0		
201200847	02-28-2012	GEN	GENERATOR	1,700				
200	07-03-2000	4	ADDITION	10,000				REAR ROOM; 6X15
320	11-01-1993	MN	Manual Note	28,000				ADDITION
352	11-01-1988	MN	Manual Note	5,000				RENO OFP

VISIT / CHANGE HISTORY

Date	Type	Is	Id	Cd	Purpose/Result
03-03-2017			317	15	PERMIT VISIT
05-06-2016			317	15	PERMIT VISIT
06-08-2012			317	15	PERMIT VISIT
03-22-2004			250	22	MAILER SENT
10-11-2003			274	2	MEASURED
01-21-2003			274	15	PERMIT VISIT
02-12-2002			274	15	PERMIT VISIT

LAND LINE VALUATION SECTION

B	Use Co	Description	Zone	D	Fronta	Depth	Land Units		Unit Price	I. Fact	S.A.	Ac Di	C. Fact	St. Idx	Adj	Notes	Special Pricing				Size A	Adj Unit Pric	Land Value
1	101	ONE FAM	RC				16,800	SF	6.79	1.000	5	LAND	1.00	MA	1.00			0			1.000	6.79	114,100
						Total Card Land Units	0.39	AC	Parcel Total Land Area:	0.39												Total Land Value	114,100

Property Location 45 TAYLOR ST | Map ID 26/ 118/ 9+10/ / | Bldg Name | State Use 101
Vision ID 1730 | Account # 1766 | Bldg # 1 | Sec # 1 of 1 | Card # 1 of 1 | Print Date 11/20/2024 12:02:34

CONSTRUCTION DETAIL

Element	Cd	Description
Style	05	CAPE
Model	01	RESIDENTIAL
Grade	C	AVERAGE
Stories	1.75	1 3/4 STORIES
Foundation	2	CONC BLOCK
Exterior Wall 1	2	CLAPBOARD
Exterior Wall 2		
Roof Structure	1	GABLE
Roof Cover	1	ASPHALT SH
Interior Wall 1	2	PLASTER
Interior Wall 2		
Interior Floor 1	3	HARDWOOD
Interior Floor 2		
Heat Fuel	2	GAS
Heat Type	1	FORCED H/A
AC Type	03	FULL
Bedrooms	3	
Full Baths	2	
Half Baths	0	
Extra Fixtures	0	
Total Rooms	6	
Bath Style	G	GOOD
Half Bath Style		
Kitchens	1	
Kitchen Style	G	GOOD
Extra Kitchens	0	
Extra Kitchen St		
FBM Sqft	585	
FBM Quality	3	
FIN ATC Sqft		
FIN ATC Quality		
Fireplaces	1	
WS Flues		

CONSTRUCTION DETAIL (CONTINUED)

Element	Cd	Description
Central Vac	0	NO
Basement Floor	12	CONCRETE
Bsmt Garage		
Units	1	

MIXED USE

Code	Description	Percentage
101	ONE FAM	100
		0
		0

COST / MARKET VALUATION

Adj Base Rate	131.47
RCN	340,405
Net Other Adj	
Year Built	1944
Effective Year Built	1991
Depreciation Code	GD
Remodel Rating	
Year Remodeled	
Depreciation %	30
Functional Obsol	
External Obsol	
Cost Trend Factor	1
Condition	
% Complete	
Overall % Condition	70
RCNLD	238,300
Dep % Ovr	
Dep Ovr Comment	
Misc Imp Ovr	
Misc Imp Ovr Comment	
Cost to Cure Ovr	
Cost to Cure Ovr Comment	

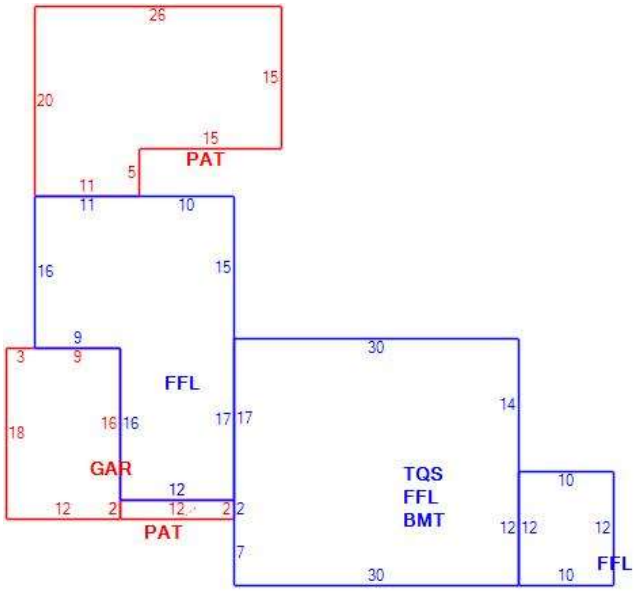

OB - OUTBUILDING & YARD ITEMS(L) / XF - BUILDING EXTRA FEATURES(B)

Code	Description	Su	Sub Type	Lan	Units	Unit Price	Yr Blt	%	Dep.	Cond	Gra	Qual	Apprais Va
02	SHED/FR			L	120	12.00	1993	60	0.00	AV	A	1.00	900
GEN	GENERATO			B	0	0.00	1988	70	1.00	AV	A	1.00	0

BUILDING SUB-AREA SUMMARY SECTION

Subarea	Description	Living	Gross	Eff Area	Unit Cost	Undeprec Value
BMT	BASEMENT	0	780		29.89	23,311
FFL	1ST FLOOR	1,428	1,428		149.43	213,388
GAR	GARAGE	0	216		59.50	12,851
PAT	PATIO	0	469		7.33	3,437
TQS	3/4 STORY	585	780		112.07	87,417
	Ttl Gross Liv / Lease Area	2,013	3,673			340,405