Property Location 322 PROSPECT ST | Map ID 30/ 26/ C/ / | Bldg Name | State Use 101
Vision ID 2680 | Account # 2726 | Bldg # 1 | Sec # 1 of 1 | Card # 1 of 1 | Print Date 11/21/2024 9:48:06 A

CURRENT OWNER	TOPO TYPE	UTILITY	STREET	LOCATION
KIRCHNER DOMINIC II				
	TOPO WET	EASEMENT	TRAFFIC	CORNER
322 PROSPECT ST				
	DRAINAGE		VIEW	COMMUNITY
EAST LONGMEADOW MA 01028				

GIS ID F_382522_2845076

SUPPLEMENTAL DATA

Alt Prcl ID	Received
SP Permit	NIA
Chapter Land	Field 8
OC Dates	Field 9
In+Ex FY	Field 10
Mailed	Assoc Pid#

CURRENT ASSESSMENT

Description	Code	Appraised	Assessed
RESIDNTL.	101	283600	283,600
RES LAND	101	135100	135,100
RESIDNTL.	101	2000	2,000
Total		420,700	420,700

1006

EAST LONGMEADOW

RECORD OF OWNERSHIP

RECORD OF OWNERSHIP	BK-VOL/PAGE		SALE DATE	Q/U	V/I	SALE PRICE	VC
KIRCHNER DOMINIC II	24933	0463	03-10-2023	U	I	10	1A
KIRCHNER DOMINIC II TR	24912	0557	02-17-2023	U	I	300,000	1
DIMICHELE PETER	24825	0297	12-01-2022	U	I	225,000	1
POWER STEPHEN F	23356	0595	08-10-2020	Q	I	350,000	00
GAMELLI JUSTIN P	20651	0020	04-03-2015	Q	I	285,000	00

PREVIOUS ASSESSMENTS (HISTORY)

Year	Code	Assessed	Year	Code	Assessed	Year	Code	Assessed
2024	101	262,800	2023	101	242,100	2022	101	215,200
	101	135,100		101	123,100		101	110,700
	101	2,000		101	1,600		101	1,600
	Total	399,900		Total	366,800		Total	327,500

EXEMPTIONS

Year	Code	Description	Amount
		Total	

OTHER ASSESSMENTS

Code	Description	YEAR	Amount	Comm Int

This signature acknowledges a visit by a Data Collector or Assessor

ASSESSING NEIGHBORHOOD

Nbhd	Nbhd Name		Tracing	Batch
0001			101	MG

NOTES

SUB DIV #830 SOLD 2.96 ACRES TO
STANLEY P CHRZAN & JAMES S CHRZAN
ON 10-26-98 BOOK 10498 P23 10000

APPRAISED VALUE SUMMARY

Appraised BLDG. Value (Card)	283,600
Appraised Xf (B) Value (Bldg)	0
Appraised Ob (B) Value (Bldg)	2,000
Appraised Land Value (Bldg)	135,100
Special Land Value	0
Total Appraised Parcel Value	420,700
Valuation Method	C
Adjustment	
Net Total Appraised Parcel Value	420,700

BUILDING PERMIT RECORD

Permit Id	Issue Date	Type	Description	Amount	Insp Date	% Comp	Date Comp	Comments
201503005	12-08-2015	25	WINDOWS	4,913	05-13-2016	100	05-13-2016	5 REPLACEMENT
201501819	06-03-2015	91	INSULATION	4,967		0		NVC
265	09-19-2002	20	WOOD STOVE	0				OC 9/20/02 NVC
147	01-01-1985	MN	Manual Note					PORCH

VISIT / CHANGE HISTORY

Date	Type	Is	Id	Cd	Purpose/Result
05-13-2016			317	15	PERMIT VISIT
03-27-2009			317	3	MEAS+INSPCTD
04-12-2004			317	14	INSPECTED
03-18-2004			AO	22	MAILER SENT
09-13-2003			274	2	MEASURED
01-21-2003			274	15	PERMIT VISIT
02-20-1992			170	3	MEAS+INSPCTD

LAND LINE VALUATION SECTION

B	Use Co	Description	Zone	D	Fronta	Depth	Land Units		Unit Price	I. Fact	S.A.	Ac Di	C. Fact	St. Idx	Adj	Notes	Special Pricing				Size A	Adj Unit Pric	Land Value
1	101	ONE FAM	RAA				40,000	SF	3.12	1.200	7	LAND	1.00	MG	1.00			0	TRF1	0.9	1.000	3.37	134,800
1	101	ONE FAM	RAA				0.040	AC	7,000.00	1.000	0		0.90	MG	1.00	TOP2		0			1.000	6,300	300
						Total Card Land Units	0.96	AC	Parcel Total Land Area:			0.96										Total Land Value	135,100

Property Location 322 PROSPECT ST | Map ID 30/ 26/ C/ / | Bldg Name | State Use 101
Vision ID 2680 | Account # 2726 | Bldg # 1 | Sec # 1 of 1 | Card # 1 of 1 | Print Date 11/21/2024 9:48:07 A

CONSTRUCTION DETAIL

Element	Cd	Description
Style	19	RANCH
Model	01	RESIDENTIAL
Grade	C+	AVG. (+)
Stories	1.00	1 STORY
Foundation	1	CONCRETE
Exterior Wall 1	4	VINYL
Exterior Wall 2	8	BRICK VENR
Roof Structure	1	GABLE
Roof Cover	1	ASPHALT SH
Interior Wall 1	1	DRYWALL
Interior Wall 2		
Interior Floor 1	3	HARDWOOD
Interior Floor 2		
Heat Fuel	1	OIL
Heat Type	1	FORCED H/A
AC Type	03	FULL
Bedrooms	3	
Full Baths	1	
Half Baths	2	
Extra Fixtures	2	
Total Rooms	6	
Bath Style	A	AVERAGE
Half Bath Style	A	AVERAGE
Kitchens	1	
Kitchen Style	A	AVERAGE
Extra Kitchens	0	
Extra Kitchen St		
FBM Sqft	1381	
FBM Quality	3	
FIN ATC Sqft		
FIN ATC Quality		
Fireplaces	1	
WS Flues		

CONSTRUCTION DETAIL (CONTINUED)

Element	Cd	Description
Central Vac	0	NO
Basement Floor	12	CONCRETE
Bsmt Garage		
Units	1	

MIXED USE

Code	Description	Percentage
101	ONE FAM	100
		0
		0

COST / MARKET VALUATION

Adj Base Rate	127.83
RCN	405,105
Net Other Adj	
Year Built	1954
Effective Year Built	1991
Depreciation Code	GD
Remodel Rating	
Year Remodeled	
Depreciation %	30
Functional Obsol	
External Obsol	
Cost Trend Factor	1
Condition	
% Complete	
Overall % Condition	70
RCNLD	283,600
Dep % Ovr	
Dep Ovr Comment	
Misc Imp Ovr	
Misc Imp Ovr Comment	
Cost to Cure Ovr	
Cost to Cure Ovr Comment	

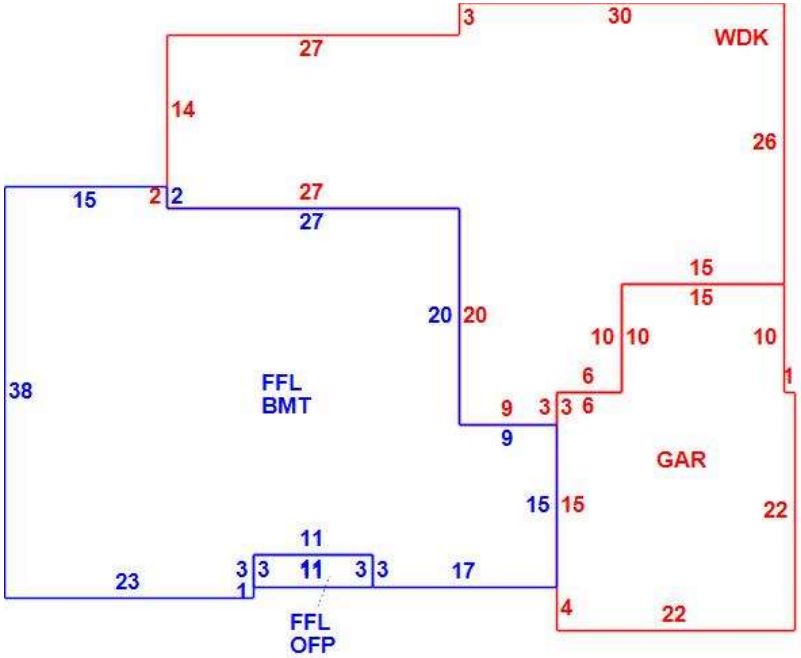

OB - OUTBUILDING & YARD ITEMS(L) / XF - BUILDING EXTRA FEATURES(B)

Code	Description	Su	Sub Type	Lan	Units	Unit Price	Yr Blt	%	Dep.	Cond	Gra	Qual	Apprais Va
02	SHED/FR			L	120	12.00	2003	70	0.00	GD	A	1.00	1,000
08	POOL A-O			L	24	69.00	2018	60	0.00	AV	A	1.00	1,000

BUILDING SUB-AREA SUMMARY SECTION

Subarea	Description	Living	Gross	Eff Area	Unit Cost	Undeprec Value
BMT	BASEMENT	0	1,625		32.18	52,287
FFL	1ST FLOOR	1,658	1,658		160.88	266,745
GAR	GARAGE	0	634		64.45	40,864
OFP	OPEN PORCH	0	33		14.63	483
WDK	WOOD DECK	0	1,389		32.20	44,726
	Ttl Gross Liv / Lease Area	1,658	5,339			405,105