Property Location 55 DEVONSHIRE TR | Map ID 31/ 11/ 7AR/ / | Bldg Name | State Use 101
Vision ID 2695 | Account # 2741 | Bldg # 1 | Sec # 1 of 1 | Card # 1 of 1 | Print Date 11/21/2024 9:50:27 A

CURRENT OWNER	TOPO TYPE	UTILITY	STREET	LOCATION
BROWN WILLIAM A LE				
	TOPO WET	EASEMENT	TRAFFIC	CORNER
55 DEVONSHIRE TR				
	DRAINAGE		VIEW	COMMUNITY
EAST LONGMEADOW MA 01028				

SUPPLEMENTAL DATA

Alt Prcl ID	Received
SP Permit	NIA
Chapter Land	Field 8
OC Dates	Field 9
In+Ex FY	Field 10
Mailed	Assoc Pid#

GIS ID F_382955_2843015

CURRENT ASSESSMENT

Description	Code	Appraised	Assessed
RESIDNTL.	101	435000	435,000
RES LAND	101	194200	194,200
Total		629,200	629,200

1006

EAST LONGMEADOW

RECORD OF OWNERSHIP

	BK-VOL/PAGE		SALE DATE	Q/U	V/I	SALE PRICE	VC
BROWN WILLIAM A LE	10704	0204	03-30-1999	U	V	1	1A
BROWN WILLIAM A,	09864	0298	05-19-1997	U	V	80,000	
DAVIS JOHN H + STEPHEN A	09348	0253	12-27-1995	U	V	1	1B

PREVIOUS ASSESSMENTS (HISTORY)

Year	Code	Assessed	Year	Code	Assessed	Year	Code	Assessed
2024	101	401,500	2023	101	372,300	2022	101	335,200
	101	194,200		101	176,600		101	181,400
	Total	595,700		Total	548,900		Total	516,600

EXEMPTIONS

Year	Code	Description	Amount
		Total	

OTHER ASSESSMENTS

Code	Description	YEAR	Amount	Comm Int

This signature acknowledges a visit by a Data Collector or Assessor

ASSESSING NEIGHBORHOOD

Nbhd	Nbhd Name		Tracing	Batch
0001			101	NS

NOTES

APPRAISED VALUE SUMMARY

Appraised BLDG. Value (Card)	435,000
Appraised Xf (B) Value (Bldg)	0
Appraised Ob (B) Value (Bldg)	0
Appraised Land Value (Bldg)	194,200
Special Land Value	0
Total Appraised Parcel Value	629,200
Valuation Method	C
Adjustment	
Net Total Appraised Parcel Value	629,200

BUILDING PERMIT RECORD

Permit Id	Issue Date	Type	Description	Amount	Insp Date	% Comp	Date Comp	Comments
201201862	04-13-2012	GEN	GENERATOR	15,000				
67	05-01-1997	MN	Manual Note	205,500				DWELLING

VISIT / CHANGE HISTORY

Date	Type	Is	Id	Cd	Purpose/Result
07-10-2019		1	334	3	MEAS+INSPCTD
06-15-2012			317	15	PERMIT VISIT
03-11-2004			105	2	MEASURED
09-02-2003			274	3	MEAS+INSPCTD
01-16-1998			181	2	MEASURED

LAND LINE VALUATION SECTION

B	Use Co	Description	Zone	D	Fronta	Depth	Land Units		Unit Price	I. Fact	S.A.	Ac Di	C. Fact	St. Idx	Adj	Notes	Special Pricing				Size A	Adj Unit Pric	Land Value
1	101	ONE FAM	RAA				40,000	SF	3.12	1.550	2	LAND	1.00	NS	1.00			0			1.000	4.84	193,600
1	101	ONE FAM	RAA				0.080	AC	7,000.00	1.000	0		1.00	NS	1.00			0			1.000	7,000	600
						Total Card Land Units	1.00	AC	Parcel Total Land Area:	1.00												Total Land Value	194,200

Property Location 55 DEVONSHIRE TR | Map ID 31/ 11/ 7AR/ / | Bldg Name | State Use 101
Vision ID 2695 | Account # 2741 | Bldg # 1 | Sec # 1 of 1 | Card # 1 of 1 | Print Date 11/21/2024 9:50:27 A

CONSTRUCTION DETAIL

Element	Cd	Description
Style	19	RANCH
Model	01	RESIDENTIAL
Grade	B-	GOOD (-)
Stories	1.00	1 STORY
Foundation	1	CONCRETE
Exterior Wall 1	4	VINYL
Exterior Wall 2		
Roof Structure	1	GABLE
Roof Cover	1	ASPHALT SH
Interior Wall 1	1	DRYWALL
Interior Wall 2		
Interior Floor 1	3	HARDWOOD
Interior Floor 2	4	CARPET
Heat Fuel	2	GAS
Heat Type	1	FORCED H/A
AC Type	03	FULL
Bedrooms	3	
Full Baths	2	
Half Baths	1	
Extra Fixtures	0	
Total Rooms	7	
Bath Style	G	GOOD
Half Bath Style	G	GOOD
Kitchens	1	
Kitchen Style	G	GOOD
Extra Kitchens	0	
Extra Kitchen St		
FBM Sqft	402	
FBM Quality	3	
FIN ATC Sqft		
FIN ATC Quality		
Fireplaces	0	
WS Flues		

CONSTRUCTION DETAIL (CONTINUED)

Element	Cd	Description
Central Vac	0	NO
Basement Floor	12	CONCRETE
Bsmt Garage		
Units	1	

MIXED USE

Code	Description	Percentage
101	ONE FAM	100
		0
		0

COST / MARKET VALUATION

Adj Base Rate	110.44
RCN	511,803
Net Other Adj	
Year Built	1997
Effective Year Built	2006
Depreciation Code	GD
Remodel Rating	
Year Remodeled	
Depreciation %	15
Functional Obsol	
External Obsol	
Cost Trend Factor	1
Condition	
% Complete	
Overall % Condition	85
RCNLD	435,000
Dep % Ovr	
Dep Ovr Comment	
Misc Imp Ovr	
Misc Imp Ovr Comment	
Cost to Cure Ovr	
Cost to Cure Ovr Comment	

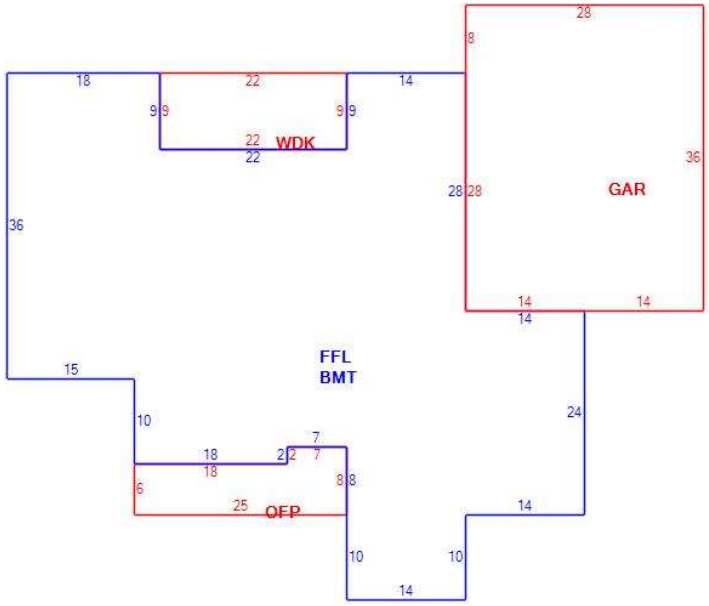

OB - OUTBUILDING & YARD ITEMS(L) / XF - BUILDING EXTRA FEATURES(B)

Code	Description	Su	Sub Type	Lan	Units	Unit Price	Yr Blt	%	Dep.	Cond	Gra	Qual	Apprais Va
GEN	GENERATO			B	0	0.00	2006	85	1.00	AV	A	1.00	0

BUILDING SUB-AREA SUMMARY SECTION

Subarea	Description	Living	Gross	Eff Area	Unit Cost	Undeprec Value
BMT	BASEMENT	0	2,682		27.82	74,606
FFL	1ST FLOOR	2,682	2,682		139.19	373,309
GAR	GARAGE	0	1,008		55.65	56,094
OFP	OPEN PORCH	0	164		13.58	2,227
WDK	WOOD DECK	0	198		28.12	5,568
	Ttl Gross Liv / Lease Area	2,682	6,734			511,803