Property Location 28 HEATHERSTONE DR | Map ID 38/ 23/ 21/ / | Bldg Name | State Use 101
Vision ID 3092 | Account # 3142 | Bldg # 1 | Sec # 1 of 1 | Card # 1 of 1 | Print Date 11/21/2024 10:49:58

CURRENT OWNER	TOPO TYPE	UTILITY	STREET	LOCATION
MORRISSETTE PAUL J				
MORRISSETTE LINDA M	**TOPO WET**	**EASEMENT**	**TRAFFIC**	**CORNER**
28 HEATHERSTONE DR	**DRAINAGE**		**VIEW**	**COMMUNITY**
EAST LONGMEADOW MA 01028				

SUPPLEMENTAL DATA

Alt Prcl ID	Received
SP Permit	NIA
Chapter Land	Field 8
OC Dates	Field 9
In+Ex FY	Field 10
Mailed	Assoc Pid#

GIS ID F_384115_2850685

CURRENT ASSESSMENT

Description	Code	Appraised	Assessed
RESIDNTL.	101	227400	227,400
RES LAND	101	149700	149,700
RESIDNTL.	101	2700	2,700
Total		379,800	379,800

1006

EAST LONGMEADOW

RECORD OF OWNERSHIP

	BK-VOL/PAGE		SALE DATE	Q/U	V/I	SALE PRICE	VC
MORRISSETTE PAUL J	20664	0002	04-15-2015	U	I	100	1A
ROSATI LINDA M	10528	0140	11-17-1998	U	I	142,500	
QUINN SANDRA A,	07679	0184	04-17-1991	U	I	63,000	1
QUINN SANDRA A	07679	0182	04-17-1991	U	I	1	1
QUINN JAMES N	04329	0188	09-29-1976	U	I	0	

PREVIOUS ASSESSMENTS (HISTORY)

Year	Code	Assessed	Year	Code	Assessed	Year	Code	Assessed
2024	101	210,100	2023	101	195,500	2022	101	177,100
	101	149,700		101	136,500		101	122,900
	101	2,700		101	2,000		101	2,000
	Total	362,500		Total	334,000		Total	302,000

EXEMPTIONS

Year	Code	Description	Amount
		Total	

OTHER ASSESSMENTS

Code	Description	YEAR	Amount	Comm Int

This signature acknowledges a visit by a Data Collector or Assessor

ASSESSING NEIGHBORHOOD

Nbhd	Nbhd Name		Tracing	Batch
0001			101	MG

NOTES

APPRAISED VALUE SUMMARY

Appraised BLDG. Value (Card)	227,400
Appraised Xf (B) Value (Bldg)	0
Appraised Ob (B) Value (Bldg)	2,700
Appraised Land Value (Bldg)	149,700
Special Land Value	0
Total Appraised Parcel Value	379,800
Valuation Method	C
Adjustment	
Net Total Appraised Parcel Value	379,800

BUILDING PERMIT RECORD

Permit Id	Issue Date	Type	Description	Amount	Insp Date	% Comp	Date Comp	Comments
202202167	06-22-2022	91	INSULATION	1,617		0		
202001873	06-15-2020	42	REPAIRS	2,000	07-15-2021	100	07-15-2021	DECK REPAIR
201402362	08-25-2014	9	ALTERATION	5,500	03-27-2015	100	03-27-2015	INSTALL BEAM/INC
201102860	10-28-2011	7	REMODEL	15,000				KITCHEN & DINING
267	10-30-2009	20	WOOD STOVE	1,500				PELLET STOVE
184	06-28-2002	11	POOL	4,500				
271	01-01-1985	MN	Manual Note					ADDITION

VISIT / CHANGE HISTORY

Date	Type	Is	Id	Cd	Purpose/Result
07-15-2021			334	15	PERMIT VISIT
03-27-2015			317	15	PERMIT VISIT
05-04-2012			317	14	INSPECTED
04-13-2012			317	15	PERMIT VISIT
01-19-2010			316	15	PERMIT VISIT
12-17-2002			274	14	INSPECTED
11-15-2002			250	22	MAILER SENT

LAND LINE VALUATION SECTION

B	Use Co	Description	Zone	D	Fronta	Depth	Land Units		Unit Price	I. Fact	S.A.	Ac Di	C. Fact	St. Idx	Adj	Notes	Special Pricing				Size A	Adj Unit Pric	Land Value
1	101	ONE FAM	RAA				40,000	SF	3.12	1.200	7	LAND	1.00	MG	1.00			0			1.000	3.74	149,600
1	101	ONE FAM	RAA				0.010	AC	7,000.00	1.000	0		1.00	MG	1.00			0			1.000	7,000	100
						Total Card Land Units	0.93	AC	Parcel Total Land Area:	0.93												Total Land Value	149,700

Property Location 28 HEATHERSTONE DR | Map ID 38/ 23/ 21/ / | Bldg Name | State Use 101
Vision ID 3092 | Account # 3142 | Bldg # 1 | Sec # 1 of 1 | Card # 1 of 1 | Print Date 11/21/2024 10:49:59

CONSTRUCTION DETAIL

Element	Cd	Description
Style	05	CAPE
Model	01	RESIDENTIAL
Grade	C	AVERAGE
Stories	1.50	1 1/2 STORIES
Foundation	1	CONCRETE
Exterior Wall 1	4	VINYL
Exterior Wall 2	8	BRICK VENR
Roof Structure	1	GABLE
Roof Cover	1	ASPHALT SH
Interior Wall 1	1	DRYWALL
Interior Wall 2	8	PLYWD PANL
Interior Floor 1	3	HARDWOOD
Interior Floor 2	4	CARPET
Heat Fuel	3	ELECTRIC
Heat Type	6	ELECTRC BB
AC Type	01	NONE
Bedrooms	4	
Full Baths	2	
Half Baths	0	
Extra Fixtures	0	
Total Rooms	8	
Bath Style	G	GOOD
Half Bath Style		
Kitchens	1	
Kitchen Style	G	GOOD
Extra Kitchens	0	
Extra Kitchen St		
FBM Sqft	432	
FBM Quality	1	
FIN ATC Sqft		
FIN ATC Quality		
Fireplaces	1	
WS Flues		

CONSTRUCTION DETAIL (CONTINUED)

Element	Cd	Description
Central Vac	0	NO
Basement Floor	12	CONCRETE
Bsmt Garage		
Units	1	

MIXED USE

Code	Description	Percentage
101	ONE FAM	100
		0
		0

COST / MARKET VALUATION

Adj Base Rate	132.93
RCN	324,793
Net Other Adj	
Year Built	1972
Effective Year Built	1991
Depreciation Code	GD
Remodel Rating	
Year Remodeled	
Depreciation %	30
Functional Obsol	
External Obsol	
Cost Trend Factor	1
Condition	
% Complete	
Overall % Condition	70
RCNLD	227,400
Dep % Ovr	
Dep Ovr Comment	
Misc Imp Ovr	
Misc Imp Ovr Comment	
Cost to Cure Ovr	
Cost to Cure Ovr Comment	

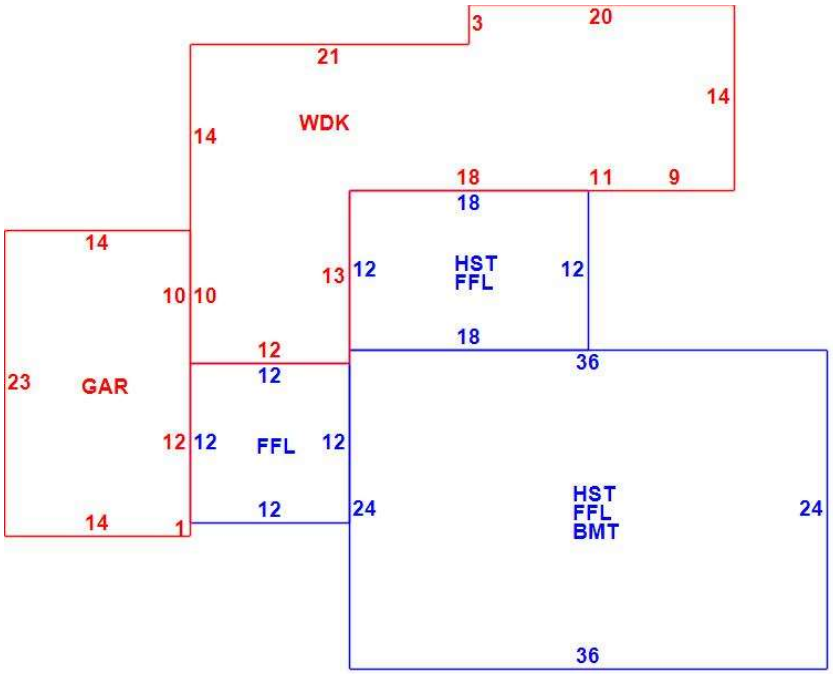

OB - OUTBUILDING & YARD ITEMS(L) / XF - BUILDING EXTRA FEATURES(B)

Code	Description	Su	Sub Type	Lan	Units	Unit Price	Yr Blt	%	Dep.	Cond	Gra	Qual	Apprais Va
07	POOL A-C	OB	Outbuildi	L	21	69.00	2002	60	0.00	AV	A	1.00	900
02	SHED/FR			L	140	12.00	2012	70	0.00	GD	A	1.00	1,200
02	SHED/FR			L	80	12.00		60	0.00	AV	A	1.00	600

BUILDING SUB-AREA SUMMARY SECTION

Subarea	Description	Living	Gross	Eff Area	Unit Cost	Undeprec Value
BMT	BASEMENT	0	864		29.57	25,552
FFL	1ST FLOOR	1,224	1,224		147.70	180,785
GAR	GARAGE	0	322		59.17	19,053
HST	HALF STORY	540	1,080		73.85	79,758
WDK	WOOD DECK	0	667		29.45	19,644
	Ttl Gross Liv / Lease Area	1,764	4,157			324,793